8-bit Enhanced USB MCU CH554

Datasheet

Version: 1H

http://wch.cn

1. Overview

CH554 is an enhanced E8051 MCU compatible with MCS51 instruction set. 79% of its instructions are single-byte single-cycle instructions, and the average instruction speed is 8 to 15 times faster than that of the standard MCS51.

CH554 supports up to 24MHz system clock frequency, and has built-in 16K program memory ROM, 256-byte internal iRAM and 1 Kbytes of internal xRAM. xRAM supports direct memory access (DMA).

CH554 has a built-in analog-to-digital converter (ADC), capacitive touchkey detection, 3 sets of timers, signal capture, PWM, 2 UARTs, SPI and other function modules. It supports USB-Host mode and USB-Device mode.

The following is the internal block diagram of CH554 for reference only.

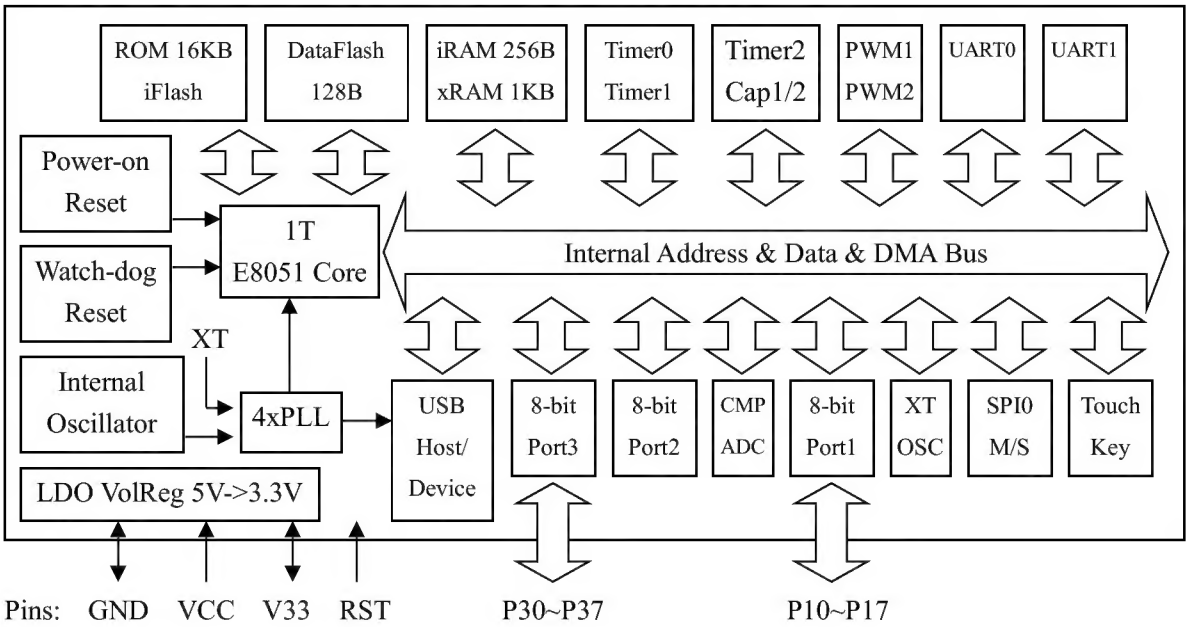

2. Features

- Core: Enhanced E8051 core compatible with MCS51 instruction set, 79% of the instructions are single-byte single-cycle instructions, and the average instruction speed is 8 ~ 15 times faster than that of the standard MCS51, with special XRAM data fast copy instruction, and dual DPTR pointer.
- ROM: Non-volatile 16KB memory ROM that can be programmed for many times, can all be used for program storage. Or it can be divided into a 14KB program storage area and a 2KB BootLoader/ISP program area.
- DataFlash: 128-byte non-volatile data memory that can be erased for many times, supports rewrite data in unit of byte.
- RAM: 256-byte internal iRAM, which can be used for fast temporary storage of data and stack. 1KB

on-chip xRAM, which can be used for temporary storage of large amount of data and direct memory access (DMA).

- USB: Built-in USB controller and USB transceiver, support USB-Host mode and USB-Device mode, support USB type-C master-slave detection, support USB 2.0 full-speed (12Mbps) and low-speed (1.5Mbps) traffic. Support data packet of up to 64 bytes, built-in FIFO, and support DMA.
- Timer: 3 sets of timers (T0/T1/T2), which are standard MCS51 timers.
- Capture: Timer T2 is extended to support 2-channel signal capture.
- PWM: 2 PWM outputs, PWM1 and PWM2, are 2-channel 8-bit PWM outputs.
- UART: 2 UARTs, both support higher communication baud rate. UART0 is a standard MCS51 serial port.
- SPI: The SPI controller has built-in FIFO, and the clock frequency can reach half of the system clock frequency (Fsys). It supports simplex multiplex of serial data input and output, and Master/Slave mode.
- ADC: 4-channel 8-bit analog digital converter, supports voltage comparison.
- Touch-key: 6-channel capacitance detection, it supports up to 15 touchkeys, and supports independent timing interrupt.
- GPIO: Up to 17 GPIO pins (including XI/XO, RST and USB signal pins).
- Interrupt: It supports 14 sets of interrupt signal sources, including 6 sets of interrupts compatible with the standard MCS51 (INT0, T0, INT1, T1, UART0, T2), and 8 sets of extended interrupts (SPI0, TKEY, USB, ADC, UART1, PWMX, GPIO, WDOG). And GPIO interrupt can be selected from 7 pins.
- Watch-Dog: 8-bit presettable watchdog timer WDOG, support timing interrupt.
- Reset: 4 kinds of reset signal sources. Built-in power-on reset, software reset, watchdog overflow reset and optional pin external input reset.
- Clock: Built-in 24 MHz clock source, which can support external crystals by multiplexing GPIO pins.
- Power: Built-in 5V to 3.3V low dropout voltage regulator, supports 5V or 3.3V or even 2.8V supply voltage, supports low-power sleep mode and external wake-up of USB, UART0, UART1, SPI0 and part of GPIOs.
- Built-in unique ID.

3. Package

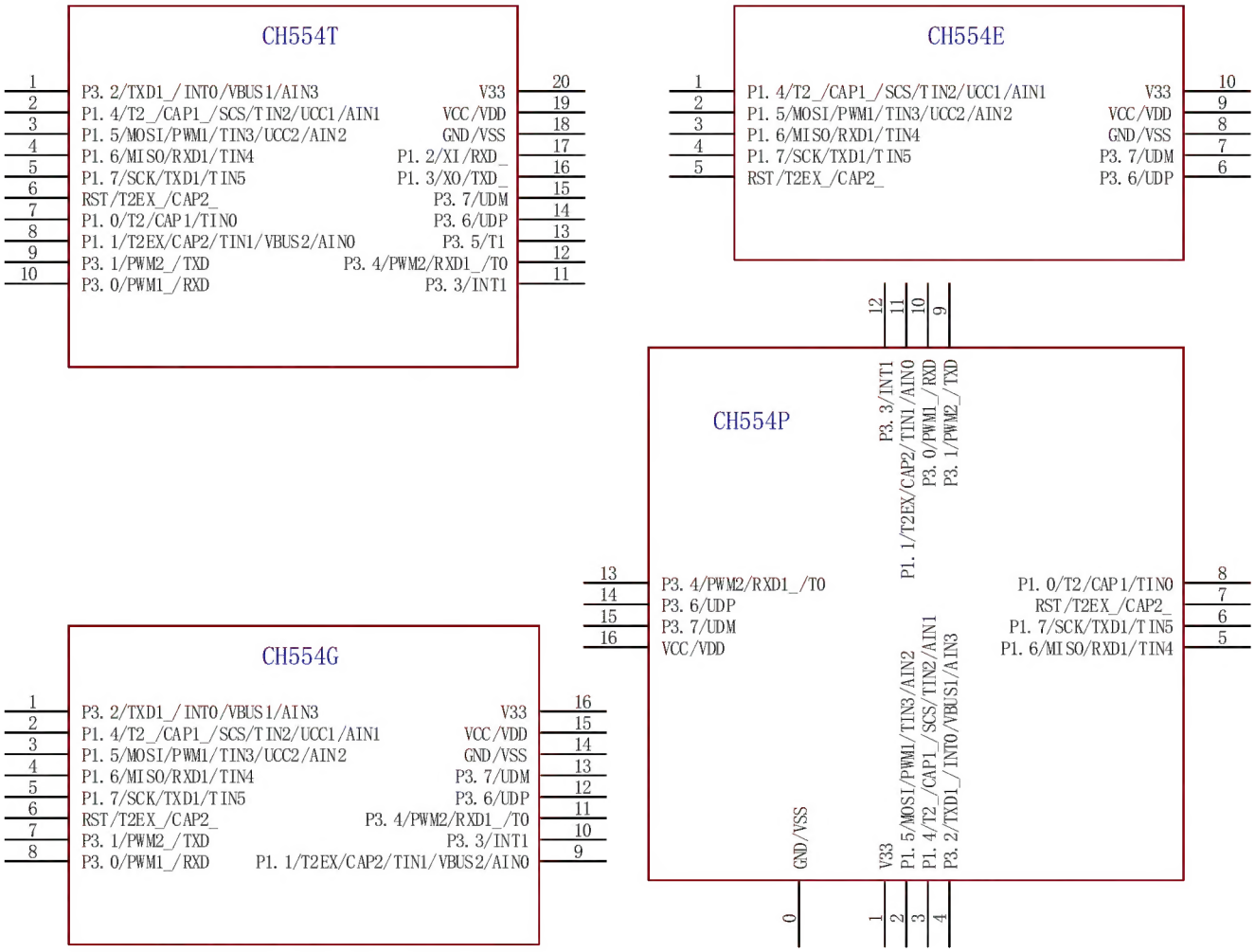

Package	Body size		Lead pitch		Description	Part No.
TSSOP-20	4.40mm	173mil	0.65mm	25mil	Thin shrink small outline 20-pin patch	CH554T
SOP-16	3.9mm	150mil	1.27mm	50mil	Standard 16-pin patch	CH554G
QFN-16	3*3mm		0.50mm	19.7mil	Quad no-lead 16-pin	CH554P
MSOP-10	3.0mm	118mil	0.50mm	19.7mil	Micro small outline 16-pin patch	CH554E

4. Pin definitions

Pin No.			Pin Name	Alternate (Left preferential)	Description
TSSOP20	SOP16	QFN16			
19	15	16	VCC	VDD	Power input, an external 0.1uF power decoupling capacitor is required.
20	16	1	V33		Internal USB power regulator output and internal USB power input, When supply voltage is less than 3.6V, connect VCC to input the external power. When supply voltage is greater than 3.6V, an external

					0.1uF power decoupling capacitor is required.
18	14	0 EPAD	GND	VSS	Ground
6	6	7	RST	RST/T2EX_/CAP2_	The pin with the suffix underscore is a mapping of the homonymous pin with no underscore. RST pin has built-in pull-down resistor, other GPIOs have pull-up resistor by default. RST: External reset input. T2: External count input/clock output of timer/counter 2. T2EX: Reload/capture input of timer/counter 2. CAP1, CAP2: Capture input 1, 2 of timer/counter 2. TIN0 ~ TIN5: 0# ~ 5# channel touchkey capacitance detection input. AIN0 ~ AIN3: 0# ~ 3# channel ADC analog signal input. UCC1, UCC2: USB type-C bidirectional configuration channel. VBUS1, VBUS2: USB type-C bus voltage detection input. XI, XO: external crystal oscillation input, external crystal oscillation inverted input. RXD, TXD: UART0 serial data input, serial data output. SCS, MOSI, MISO, SCK: SPI0 interfaces, SCS is Chip Select input, MOSI is host output/slave input, MISO is host input/slave output, SCK is serial clock. PWM1, PWM2: PWM1 output, PWM2 output. RXD1, TXD1: UART1 serial data input, serial data output. INT0, INT1: external interrupt 0, external interrupt 1 input. T0, T1: timer 0, timer 1 external input. UDM, UDP: D- signal and D+ signal of USB host or USB device. Note: P3.6 and P3.7 internally use V33 as I/O power, so the high level of input and output can only reach the voltage V33, and 5V is not supported
7	-	8	P1.0	T2/CAP1/TIN0	
8	9	11	P1.1	T2EX/CAP2/TIN1 /VBUS2/AIN0	
17	-	-	P1.2	XI/RXD_	
16	-	-	P1.3	XO/TXD_	
2	2	3	P1.4	T2_/CAP1_/SCS /TIN2/UCC1/AIN1	
3	3	2	P1.5	MOSI/PWM1/TIN3 /UCC2/AIN2	
4	4	5	P1.6	MISO/RXD1/TIN4	
5	5	6	P1.7	SCK/TXD1/TIN5	
10	8	10	P3.0	PWM1_/RXD	
9	7	9	P3.1	PWM2_/TXD	
1	1	4	P3.2	TXD1_/INT0 /VBUS1/AIN3	
11	10	12	P3.3	INT1	
12	11	13	P3.4	PWM2/RXD1_/T0	
13	-	-	P3.5	T1	
14	12	14	P3.6	UDP	
15	13	15	P3.7	UDM	

Note: The USB transceiver is designed built-in based on USB2.0. The P3.6 pin and the P3.7 pin cannot be connected to resistors in series when they are used for USB.

5. Special function register (SFR)

The following abbreviations may be used in this datasheet to describe the registers:

Abbreviation	Description
RO	Software can only read these bits.
WO	Software can only write to this bit. The read value is invalid.
RW	Software can read and write to these bits.
H	End with it to indicate a hexadecimal number
B	End with it to indicate a binary number

5.1 Introduction to SFR and address distribution

CH554 controls and manages the device, and sets the working mode via a special function register (SFR).

SFR occupies 80H-FFH address range of the internal data address space and can only be accessed by direct address commands. Registers with the x0h and x8h addresses can be accessed by bits to avoid modifying the values of other bits when accessing a specific bit. Other registers with the addresses that are not the multiple of 8 can only be accessed by bytes.

Some SFRs can be written only in safe mode, while they can be read only in non-safe mode, for example: GLOBAL_CFG, CLOCK_CFG, WAKE_CTRL.

Some SFRs have one or more aliases, for example: SPI0_CK_SE / SPI0_S_PRE, UDEV_CTRL / UHOST_CTRL, UEP1_CTRL / UH_SETUP, UEP2_CTRL / UH_RX_CTRL, UEP2_T_LEN / UH_EP_PID, UEP3_CTRL / UH_TX_CTRL, UEP3_T_LEN / UH_TX_LEN, UEP2_3_MOD / UH_EP_MOD, UEP2_DMA_H / UH_RX_DMA_H, UEP2_DMA_L / UH_RX_DMA_L, UEP2_DMA / UH_RX_DMA, UEP3_DMA_H / UH_TX_DMA_H, UEP3_DMA_L / UH_TX_DMA_L, UEP3_DMA/UH_TX_DMA.

Some addresses correspond to several independent SFRs, for example: SAFE_MOD/CHIP_ID, ROM_CTRL/ROM_STATUS.

CH554 contains the 8051 standard SFR register, and other device control registers are added at the same time. See the table below for SFRs.

Table 5.1 Special function registers

SFR	0, 8	1, 9	2, A	3, B	4, C	5, D	6, E	7, F
0xF8	SPI0_STAT	SPI0_DATA	SPI0_CTRL	SPI0_CK_SE SPI0_S_PRE	SPI0_SETUP		RESET_KEEP	WDOG_COUNT
0xF0	B							
0xE8	IE_EX	IP_EX	UEP4_1_MOD	UEP2_3_MOD UH_EP_MOD	UEP0_DMA_L	UEP0_DMA_H	UEP1_DMA_L	UEP1_DMA_H
0xE0	ACC	USB_INT_EN	USB_CTRL	USB_DEV_AD	UEP2_DMA_L UH_RX_DMA_L	UEP2_DMA_H UH_RX_DMA_H	UEP3_DMA_L UH_TX_DMA_L	UEP3_DMA_H UH_TX_DMA_H
0xD8	USB_INT_FG	USB_INT_ST	USB_MIS_ST	USB_RX_LEN	UEP0_CTRL	UEP0_T_LEN	UEP4_CTRL	UEP4_T_LEN
0xD0	PSW	UDEV_CTRL UHOST_CTRL	UEP1_CTRL UH_SETUP	UEP1_T_LEN	UEP2_CTRL UH_RX_CTRL	UEP2_T_LEN UH_EP_PID	UEP3_CTRL UH_TX_CTRL	UEP3_T_LEN UH_TX_LEN
0xC8	T2CON	T2MOD	RCAP2L	RCAP2L	TL2	TH2	T2CAP1L	T2CAP1H
0xC0	SCON1	SBUF1	SBAUD1	TKEY_CTRL	TKEY_DATL	TKEY_DATH	PIN_FUNC	GPIO_IE
0xB8	IP	CLOCK_CFG						

0xB0	P3	GLOBAL_CFG						
0xA8	IE	WAKE_CTRL						
0xA0	P2	SAFE_MOD CHIP_ID	XBUS_AUX					
0x98	SCON	SBUF	ADC_CFG	PWM_DATA2	PWM_DATA1	PWM_CTRL	PWM_CK_SE	ADC_DATA
0x90	P1	USB_C_CTRL	P1_MOD_OC	P1_DIR_PU			P3_MOD_OC	P3_DIR_PU
0x88	TCON	TMOD	TL0	TL1	TH0	TH1	ROM_DATA_L	ROM_DATA_H
0x80	ADC_CTRL	SP	DPL	DPH	ROM_ADDR_L	ROM_ADDR_H	ROM_CTRL ROM_STATUS	PCON

Notes : (1) Those in red text can be accessed by bits;

(2) The following table shows the corresponding description of different color boxes.

	Register address
	SPI0 register
	ADC register
	Touch-Key registers
	USB register
	Timer/counter2 register
	Port setting register
	PWM1 and PWM2 registers
	UART1 register
	Flash-ROM register

5.2 SFR classification and reset value

Figure 5.2 SFR description and reset value

Function Classification	Name	Address	Description	Reset value
System setting registers	B	F0h	B register	0000 0000b
	ACC	E0h	Accumulator	0000 0000b
	PSW	D0h	Program status word register	0000 0000b
	GLOBAL_CFG	B1h	Global configuration register (Bootloader)	0010 0000b
			Global configuration register (application)	0000 0000b
	CHIP_ID	A1h	ID code of CH554 (read-only)	0101 0100b
	SAFE_MOD	A1h	Safe mode control register (write only)	0000 0000b
	DPH	83h	Data address pointer high 8 bits	0000 0000b
	DPL	82h	Data address pointer low 8 bits	0000 0000b
	DPTR	82h	DPL and DPH constitute a 16-bit SFR	0000h
	SP	81h	Stack pointer	0000 0111b
Clock, sleep and power	WDOG_COUNT	FFh	Watchdog count register	0000 0000b
	RESET_KEEP	FEh	Reset keep register (in power-on reset status)	0000 0000b

control registers	CLOCK_CFG	B9h	System clock configuration register	1000 0011b
	WAKE_CTRL	A9h	Sleep wake-up control register	0000 0000b
	PCON	87h	Power control register (in power-on reset status)	0001 0000b
Interrupt control registers	IP_EX	E9h	Extend interrupt priority control register	0000 0000b
	IE_EX	E8h	Extend interrupt enable register	0000 0000b
	GPIO_IE	C7h	GPIO interrupt enable register	0000 0000b
	IP	B8h	Interrupt priority control register	0000 0000b
	IE	A8h	Interrupt enable register	0000 0000b
Flash-ROM registers	ROM_DATA_H	8Fh	Flash-ROM data register high bytes	xxxx xxxxb
	ROM_DATA_L	8Eh	Flash-ROM data register low bytes	xxxx xxxxb
	ROM_DATA	8Eh	ROM_DATA_L and ROM_DATA_H constitute a 16-bit SFR	xxxxh
	ROM_STATUS	86h	flash-ROM status register (read only)	0000 0000b
	ROM_CTRL	86h	flash-ROM control register (write only)	0000 0000b
	ROM_ADDR_H	85h	flash-ROM address register high bytes	xxxx xxxxb
	ROM_ADDR_L	84h	flash-ROM address register low bytes	xxxx xxxxb
	ROM_ADDR	84h	ROM_ADDR_L and ROM_ADDR_H constitute a 16-bit SFR	xxxxh
Port setting registers	PIN_FUNC	C6h	Pin function selection register	1000 0000b
	XBUS_AUX	A2h	External bus auxiliary setting register	0000 0000b
	P3_DIR_PU	97h	P3 port direction control and pull-up enable register	1111 1111b
	P3_MOD_OC	96h	P3 port output mode register	1111 1111b
	P1_DIR_PU	93h	P1 port direction control and pull-up enable register	1111 1111b
	P1_MOD_OC	92h	P1 port output mode register	1111 1111b
	P3	B0h	P3 port input and output register	1111 1111b
	P2	A0h	P2 port output register	1111 1111b
	P1	90h	P1 port input and output register	1111 1111b
Timer/counter 0 and 1 registers	TH1	8Dh	Timer1 count high byte	xxxx xxxxb
	TH0	8Ch	Timer0 count high byte	xxxx xxxxb
	TL1	8Bh	Timer1 count low byte	xxxx xxxxb
	TL0	8Ah	Timer0 count low byte	xxxx xxxxb
	TMOD	89h	Timer0/1 mode register	0000 0000b
	TCON	88h	Timer0/1 control register	0000 0000b
UART0 registers	SBUF	99h	UART0 data register	xxxx xxxxb
	SCON	98h	UART0 control register	0000 0000b

Timer/counter 2 registers	T2CAP1H	CFh	Timer2 capture 1 data high byte (read only)	xxxx xxxxb
	T2CAP1L	CEh	Timer2 capture 1 data low byte (read only)	xxxx xxxxb
	T2CAP1	CEh	T2CAP1L and T2CAP1H constitute a 16-bit SFR	xxxxh
	TH2	CDh	Timer2 counter high bytes	0000 0000b
	TL2	CCh	Timer2 counter low bytes	0000 0000b
	T2COUNT	CCh	TL2 and TH2 constitute a 16-bit SFR	0000h
	RCAP2H	CBh	Count reload/capture 2 data register high bytes	0000 0000b
	RCAP2L	CAh	Count reload/capture 2 data register low bytes	0000 0000b
	RCAP2	CAh	RCAP2L and RCAP2H constitute a 16-bit SFR	0000h
	T2MOD	C9h	Timer2 mode register	0000 0000b
	T2CON	C8h	Timer2 control register	0000 0000b
PWM1 and PWM2 registers	PWM_CK_SE	9Eh	PWM clock setting register	0000 0000b
	PWM_CTRL	9Dh	PWM control register	0000 0010b
	PWM_DATA1	9Ch	PWM1 data register	xxxx xxxxb
	PWM_DATA2	9Bh	PWM2 data register	xxxx xxxxb
SPI0 registers	SPI0_SETUP	FCh	SPI0 setup register	0000 0000b
	SPI0_S_PRE	FBh	SPI0 slave mode preset data register	0010 0000b
	SPI0_CK_SE	FBh	SPI0 clock setting register	0010 0000b
	SPI0_CTRL	FAh	SPI0 control register	0000 0010b
	SPI0_DATA	F9h	SPI0 data receive/transmit register	xxxx xxxxb
	SPI0_STAT	F8h	SPI0 status register	0000 1000b
UART1 registers	SBAUD1	C2h	UART1 baud rate setting register	xxxx xxxxb
	SBUF1	C1h	UART1 data register	xxxx xxxxb
	SCON1	C0h	UART1 control register	0100 0000b
ADC registers	ADC_DATA	9Fh	ADC data register	xxxx xxxxb
	ADC_CFG	9Ah	ADC configuration register	0000 0000b
	ADC_CTRL	80h	ADC control register	x000 0000b
Touch-Key registers	TKEY_DATH	C5h	Touch-Key data high byte (read only)	0000 0000b
	TKEY_DATL	C4h	Touch-Key data low byte (read only)	xxxx xxxxb
	TKEY_DAT	C4h	TKEY_DATL and KEY_DATH constitute a 16-bit SFR	00xxh
	TKEY_CTRL	C3h	Touch-Key control register	x000 0000b
USB registers	UEP1_DMA_H	EFh	Endpoint1 buffer start address high byte	0000 00xxb
	UEP1_DMA_L	EEh	Endpoint1 buffer start address low byte	xxxx xxxxb

	UEP1_DMA	EEh	UEP1_DMA_L and UEP1_DMA_H constitute a 16-bit SFR	0xxxh
	UEP0_DMA_H	EDh	Endpoint0 and endpoint 4 buffer start address high byte	0000 00xxb
	UEP0_DMA_L	ECh	Endpoint0 and endpoint 4 buffer start address low byte	xxxx xxxxb
	UEP0_DMA	ECh	UEP0_DMA_L and UEP0_DMA_H constitutes 16-bit SFR	0xxxh
	UEP2_3_MOD	EBh	Endpoint2 and endpoint 3 mode control register	0000 0000b
	UH_EP_MOD	EBh	USB host endpoint mode control register	0000 0000b
	UEP4_1_MOD	EAh	Endpoint1 and endpoint4 mode control register	0000 0000b
	UEP3_DMA_H	E7h	Endpoint3 buffer start address high bytes	0000 00xxb
	UEP3_DMA_L	E6h	Endpoint3 buffer start address low bytes	xxxx xxxxb
	UEP3_DMA	E6h	UEP3_DMA_L and UEP3_DMA_H constitute a 16-bit SFR	0xxxh
	UH_TX_DMA_H	E7h	USB host transmit buffer start address high byte	0000 00xxb
	UH_TX_DMA_L	E6h	USB host transmit buffer start address low byte	xxxx xxxxb
	UH_TX_DMA	E6h	UH_TX_DMA_L and UH_TX_DMA_H constitute a 16-bit SFR	0xxxh
	UEP2_DMA_H	E5h	Endpoint2 buffer start address high byte	0000 00xxb
	UEP2_DMA_L	E4h	Endpoint2 buffer start address low byte	xxxx xxxxb
	UEP2_DMA	E4h	UEP2_DMA_L and UEP2_DMA_H constitute a 16-bit SFR	0xxxh
	UH_RX_DMA_H	E5h	USB host receive buffer start address high bytes	0000 00xxb
	UH_RX_DMA_L	E4h	USB host receive buffer start address low bytes	xxxx xxxxb
	UH_RX_DMA	E4h	UH_RX_DMA_L and UH_RX_DMA_H constitute a 16-bit SFR	0xxxh
	USB_DEV_AD	E3h	USB device address register	0000 0000b
	USB_CTRL	E2h	USB control register	0000 0110b
	USB_INT_EN	E1h	USB interrupt enable register	0000 0000b
	UEP4_T_LEN	DFh	Endpoint4 transmission length register	0xxx xxxxb
	UEP4_CTRL	DEh	Endpoint4 control register	0000 0000b
	UEP0_T_LEN	DDh	Endpoint0 transmission length register	0xxx xxxxb

	UEP0_CTRL	DCh	Endpoint0 control register	0000 0000b
	USB_RX_LEN	DBh	USB reception length register (read only)	0xxx xxxxb
	USB_MIS_ST	DAh	USB miscellaneous status register (read only)	xx10 1000b
	USB_INT_ST	D9h	USB interrupt status register (read only)	00xx xxxxb
	USB_INT_FG	D8h	USB interrupt flag register	0010 0000b
	UEP3_T_LEN	D7h	Endpoint3 transmission length register	0xxx xxxxb
	UH_TX_LEN	D7h	USB host transmission length register	0xxx xxxxb
	UEP3_CTRL	D6h	Endpoint3 control register	0000 0000b
	UH_TX_CTRL	D6h	USB host transmission endpoint control register	0000 0000b
	UEP2_T_LEN	D5h	Endpoint2 transmission length register	0000 0000b
	UH_EP_PID	D5h	USB host token setting register	0000 0000b
	UEP2_CTRL	D4h	Endpoint2 control register	0000 0000b
	UH_RX_CTRL	D4h	USB host reception endpoint control register	0000 0000b
	UEP1_T_LEN	D3h	Endpoint1 transmission length register	0xxx xxxxb
	UEP1_CTRL	D2h	Endpoint1 control register	0000 0000b
	UH_SETUP	D2h	USB host auxiliary setting register	0000 0000b
	UDEV_CTRL	D1h	USB device port control register	10xx 0000b
	UHOST_CTRL	D1h	USB host port control register	10xx 0000b
	USB_C_CTRL	91h	USB type-C configuration channel control register	0000 0000b

5.3 General-purpose 8051 registers

Table 5.3.1 General-purpose 8051 registers

Name	Address	Description	Reset value
B	F0h	B register	00h
A , ACC	E0h	Accumulator	00h
PSW	D0h	Program status word register	00h
GLOBAL_CFG	B1h	Global configuration register (in Boot loader status)	20h
		Global configuration register (in application program status)	00h
CHIP_ID	A1h	ID code of CH554 (read-only)	54h
SAFE_MOD	A1h	Safe mode control register (write only)	00h
PCON	87h	Power control register (in power-on reset status)	10h
DPH	83h	Data address pointer high 8 bits	00h
DPL	82h	Data address pointer low 8 bits	00h

DPTR	82h	DPL and DPH constitute a 16-bit SFR	0000h
SP	81h	Stack pointer	07h

B register (B):

Bit	Name	Access	Description	Reset value
[7:0]	B	RW	Arithmetic operation register, mainly used for multiplication and division operations, accessed by bits.	00h

A accumulator (A, ACC):

Bit	Name	Access	Description	Reset value
[7:0]	A/ACC	RW	Arithmetic operation accumulator, accessed by bits.	00h

Program status word register (PSW):

Bit	Name	Access	Description	Reset value
7	CY	RW	Carry flag bit: used to record the carry or borrow of the highest bit when performing arithmetic operations and logical operations. In 8-bit addition operation, this bit is set if the highest bit is carried, otherwise it is cleared. In 8-bit subtraction operation, this bit is set if the highest bit is borrowed, otherwise it is cleared. Logical command can set and reset this bit.	0
6	AC	RW	Auxiliary carry flag bit. In addition and subtraction operations, if there is a carry or borrow from the higher 4 bits to the lower 4 bits, then AC is set, otherwise it is reset.	0
5	F0	RW	General flag bit 0, accessed by bits. User-defined. Set and reset by software.	0
4	RS1	RW	Register bank selection high bit	0
3	RS0	RW	Register bank selection low bit	0
2	OV	RW	Overflow flag bit. In addition and subtraction operations, if the operation result exceeds 8-bit binary number, OV is set to 1 and the flag overflows, otherwise it is reset.	0
1	F1	RW	General flag bit 1, accessed by bits. User-defined. Set and reset by software.	0
0	P	RO	Parity flag bit. This bit records the parity of '1' in accumulator A after the command is executed. If the number of '1' is an odd number, P is set. If the number of '1' is an even number, P is reset.	0

The state of processor is stored in the program status word register (PSW), and PSW can be accessed by bits. The status word includes the carry flag bit, auxiliary carry flag bit for BCD code processing, parity flag bit, overflow flag bit, and RS0 and RS1 for working register bank selection.The area where the

working register bank is located can be accessed directly or indirectly.

Table 5.3.2 RS1 and RS0 working register bank selection

RS1	RS0	Working register bank
0	0	Bank 0 (00h-07h)
0	1	Bank 1 (08h-0Fh)
1	0	Bank 2 (10h-17h)
1	1	Bank 3 (18h-1Fh)

Table 5.3.3 Operations that affect flag bits (X means that flag bit is related to the operation result)

Operation	CY	OV	AC	Operation	CY	OV	AC
ADD	X	X	X	SETB C	1		
ADDC	X	X	X	CLR C	0		
SUBB	X	X	X	CPL C	X		
MUL	0	X		MOV C, bit	X		
DIV	0	X		ANL C, bit	X		
DA A	X			ANL C,/bit	X		
RRC A	X			ORL C, bit	X		
RLC A	X			ORL C,/bit	X		
CJNE	X						

Data address pointer (DPTR):

Bit	Name	Access	Description	Reset value
[7:0]	DPL	RW	Data pointer low byte	00h
[7:0]	DPH	RW	Data pointer high byte	00h

DPL and DPH constitute a 16-bit data pointer DPTR, used to access xRAM data memory and program memory. The actual DPTR corresponds to 2 sets of physical 16-bit data pointers, DPTR0 and DPTR1, which are dynamically selected by DPS of XBUS_AUX.

Stack pointer (SP):

Bit	Name	Access	Description	Reset value
[7:0]	SP	RW	Stack pointer, mainly used for program calls and interrupt calls as well as data in and out of the stack	07h

Specific functions of stack: protect breakpoint and protect site, and carry out management on the first-in last-out principle. During instack, SP pointer automatically adds 1, saving the data or breakpoint information. During outstack, SP pointer points to the data unit and automatically substracts 1. The initial value of SP is 07h after reset, and the corresponding default stack storage starts from 08h.

5.4 Special registers

Global configuration register (GLOBAL_CFG), only can be written in safe mode:

Bit	Name	Access	Description	Reset value
[7:6]	Reserved	RO	Always 00.	00b
5	bBOOT_LOAD	RO	Boot loader status bit, used to distinguish ISP Boot loader status or application status: set 1 during power-on, and cleared to 0 during software reset. For the chip with ISP boot loader, if this bit is 1, it has never been reset by software and it is usually in ISP boot loader running after power on state. If this bit is 0, it has been reset by software, and it is usually in application state.	1
4	bSW_RESET	RW	Software reset control bit. If it is set to 1, software reset occurs. Automatically reset by hardware.	0
3	bCODE_WE	RW	Flash-ROM and DataFlash write enable bit: 0: Write protection; 1: Flash-ROM and Data can be rewritten.	0
2	bDATA_WE	RW	DataFlash area of Flash-ROM write enable bit: 0: Write protection; 1: DataFlash area can be rewritten.	0
1	bLDO3V3_OFF	RW	USB power regulator LDO OFF control bit: 0: LDO is allowed, 3.3V voltage can be generated from 5V power for USB and internal clock oscillator; 1: LDO is disabled, and V33 pin must input external 3.3V power	0
0	bWDOG_EN	RW	Watchdog reset enable bit: 0: The watchdog is only used as timer; 1: Watchdog reset enabled when timing overflows.	0

ID code of chip (CHIP_ID):

Bit	Name	Access	Description	Reset value
[7:0]	CHIP_ID	RO	Always 54h, used to identify the chip	54h

Safe mode control register (SAFE_MOD):

Bit	Name	Access	Description	Reset value
[7:0]	SAFE_MOD	WO	Used to enter or terminate safe mode	00h

Some SFRs can only be written in safe mode, while they are always read-only in non-safe mode. Steps for entering safe mode:

(1). Write 55h into this register.

(2). And then write AAh into this register.

(3). After that, they are in safe mode for about 13 to 23 system clock cycles, and one or more safe class

SFR or ordinary SFR can be rewritten in such validity period.

(4). Automatically terminate the safe mode after the expiration of the above validity period.

(5). Alternatively, write any value to the register to prematurely terminate safe mode.

6. Memory structure

6.1 Memory space

CH554 addressing space is divided into Program Address Space, Internal Data Address Space and External Data Address Space.

Figure 6.1 Memory structure diagram

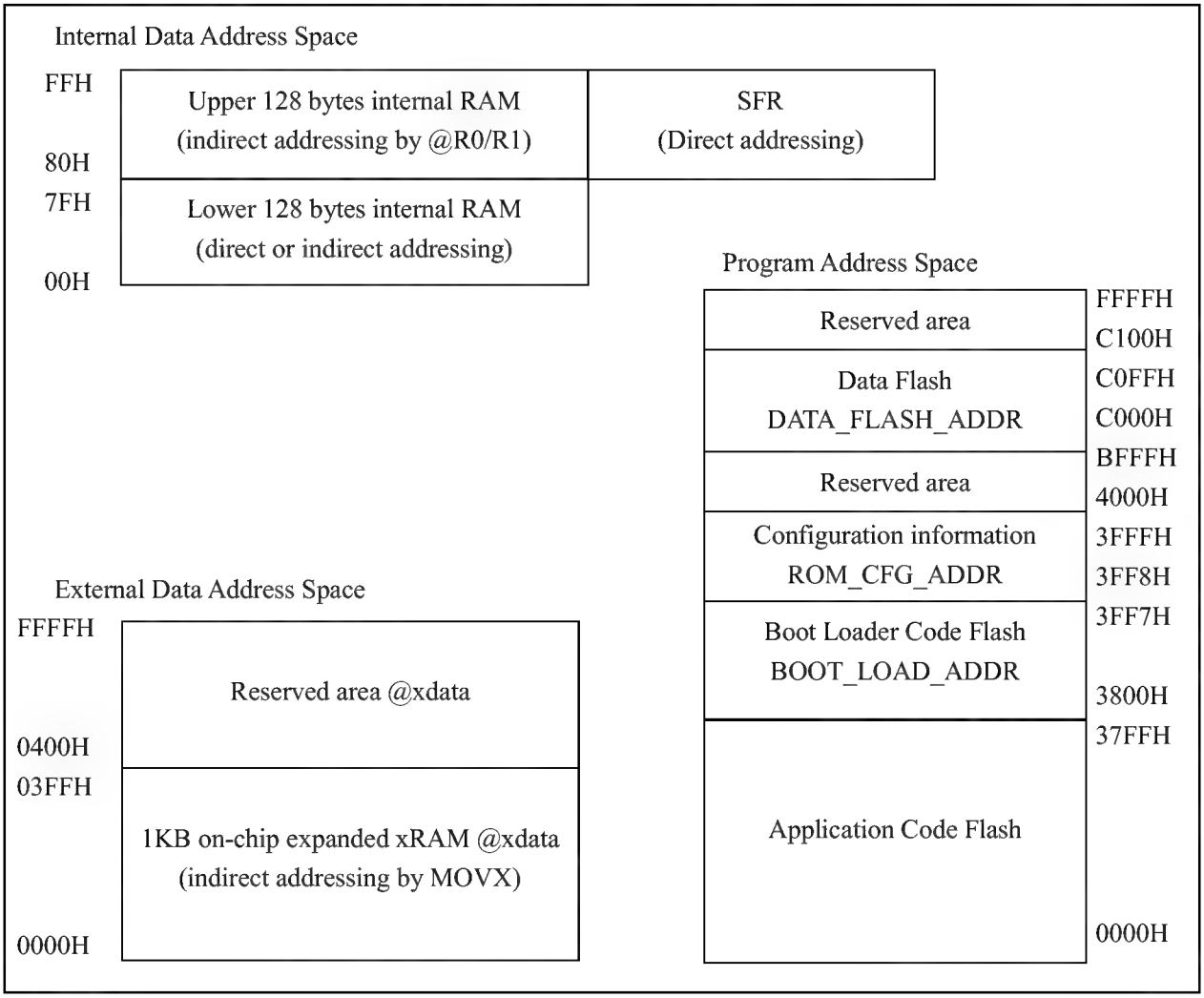

6.2 Program address space

The program address space is 64KB in total, as shown in Figure 6.1, 16KB of which is used for ROM, including the Code Flash area to save the command code and the Configuration Information area.

Code Flash includes the application code for the low address area and the boot loader code for the high address area, or these two areas may be combined to save single application code.

ROM is an iFlash™ process. The finished products after formally packaged by blank ROM can be programmed about 200 times under 5V power.

Data Flash address ranges from C000h to C0FFH (only the even addresses are valid, actually there is a storage unit every other byte), only support single byte (8-bit) read and write operations, the data remains unchanged after the chip is powered down. Data Flash supports about 10,000 erase/program operations, and balanced use is recommended. It is prohibited to erase/program more than 10K times to the same storage unit. For more erase/program operations, it is recommended to use CH559 or CH548/9.

Configuration Information includes 4 sets of 16-bit data located at the addresses from 3FF8H to 3FFFH, and the last three sets are read-only units that provide chip ID. The configuration data located at 3FF8H address is set by the programmer as required, refer to Table 6.2.

Table 6.2 flash-ROM configuration information description

Bit address	Bit name	Description	Recommended value
15	Code_Protect	Code and data protection mode in flash-ROM: 0: Disable the programmer to read, and keep the program secret. 1: Read enabled.	0/1
14	No_Boot_Load	Enable BootLoader start mode: 0: Start from the application from 0000h address; 1: Start from the boot loader from 3800h address	1
13	En_Long_Reset	Extra delay reset during enable power on reset: 0: Standard short reset; 1: Wide reset, with extra 44mS reset time added	0
12	En_RST_RESET	Enable RST pin as manual reset input pin: 0: Disabled; 1: RST enabled.	0
[11:10]	Reserved	(Automatically set to 00 by the programmer as required)	00
9	Must_1	(Automatically set to 1 by the programmer as required)	1
8	Must_0	(Automatically set to 0 by the programmer as required)	0
[7:0]	All_1	(Automatically set to FFh by the programmer as required)	FFh

6.3 Data address space

The internal data address space, with 256 bytes in total, as shown in Figure 6.1, has been all used for SFR and iRAM, and iRAM is used for stack and fast temporary data storage, and can be subdivided into the working registers R0-R7, bit variable bdata, byte variable data and idata, etc.

External data address space is 64KB in total, as shown in Figure 6.1. Part of it is used for 1KB on-chip expanded xRAM, and the remaining is reserved.

6.4 flash-ROM register

Table 6.4 flash-ROM operation registers

Name	Address	Description	Reset value
ROM_DATA_H	8Fh	Flash-ROM data register high byte	xxh
ROM_DATA_L	8Eh	Flash-ROM data register low byte	xxh

ROM_DATA	8Eh	ROM_DATA_L and ROM_DATA_H constitute a 16-bit SFR	xxxxh
ROM_STATUS	86h	flash-ROM status register (read only)	00h
ROM_CTRL	86h	flash-ROM control register (write only)	00h
ROM_ADDR_H	85h	flash-ROM address register high byte	xxh
ROM_ADDR_L	84h	flash-ROM address register low byte	xxh
ROM_ADDR	84h	ROM_ADDR_L and ROM_ADDR_H constitute a 16-bit SFR	xxxxh

flash-ROM address register (ROM_ADDR):

Bit	Name	Access	Description	Reset value
[7:0]	ROM_ADDR_H	RW	flash-ROM address high byte	xxh
[7:0]	ROM_ADDR_L	RW	Flash -ROM address low byte, only supports even addresses, For Data Flash, the actual offset address of 00H-7fH must be shifted 1 bit left to become an even address of 00H/02H/04H... ~FEH and then re-insert.	xxh

flash-ROM data register (ROM_DATA):

Bit	Name	Access	Description	Reset value
[7:0]	ROM_DATA_H	RW	flash-ROM high bytes of data to be written	xxh
[7:0]	ROM_DATA_L	RW	flash-ROM low bytes of data to be written For DataFlash, they are data bytes to be written or read	xxh

flash-ROM control register (ROM_CTRL):

Bit	Name	Access	Description	Reset value
[7:0]	ROM_CTRL	WO	flash-ROM control register	00h

flash-ROM status register (ROM_STATUS):

Bit	Name	Access	Description	Reset value
7	Reserved	RO	Reserved	0
6	bROM_ADDR_OK	RO	flash-ROM write operation address valid status bit: 0: The parameter is invalid; 1: Address is valid	0
[5:2]	Reserved	RO	Reserved	0000b
1	bROM_CMD_ERR	RO	flash-ROM operation command error status bit:	0

			0: The command is valid; 1: Unknown command	
0	Reserved	RO	Reserved	0

6.5 flash-ROM operation steps

1. Write the flash-ROM code area to write the double bytes data to the target address:
   (1). If the flash-ROM code is required to be written, 5V supply voltage must be selected.
   (2). Enable safe mode: SAFE_MOD = 55h; SAFE_MOD = 0AAh.
   (3). Set the global configuration register (GLOBAL_CFG) to start write enable (bCODE_WE or bDATA_WE corresponds to code or data).
   (4). Set the address register (ROM_ADDR), to write a 16-bit target address (the lowest bit is always 0).
   (5). Set the data register (ROM_DATA), to write the 16-bit data to be written, the sequence of steps (4) and (5) can be alternative.
   (6). Set the operation control register (ROM_CTRL) to 09Ah, to execute write operation, and the program is automatically paused during operation.
   (7). After the operation is completed, the program resumes running. In this case, you can inquire the status register (ROM_STATUS) to check the status of the operation. If more than one data needs to be written, repeat the steps of (4), (5), (6) and (7).
   (8). Re-enter the safe mode: SAFE_MOD = 55h; SAFE_MOD = 0AAh.
   (9). Set the global configuration register (GLOBAL_CFG) to start write protection (bCODE_WE=0, bDATA_WE=0).

2. Write the Data Flash data area to write the single-byte data to the target address:
   (1). Enable safe mode: SAFE_MOD = 55h; SAFE_MOD = 0AAh.
   (2). Set the global configuration register (GLOBAL_CFG) to start write enable (bDATA_WE corresponds to data).
   (3). Set the address register (ROM_ADDR) to write a 16-bit target address, and the actual offset addresses of 00H-7FH must be shifted 1 bit left to become even addresses of 00H/02H/04H...~FEH, and the final addresses are C000H/C002H/C004... in sequence.
   (5). Set the data register (ROM_DATA_L) to write an 8-bit data to be written. The sequence of steps (3) and (4) can be alternative.
   (5). Set the operation control register (ROM_CTRL) to 09Ah to execute write operation, and the program is automatically paused during operation;
   (6). After the operation is completed, the program resumes running. In this case, you can inquire the status register (ROM_STATUS) to check the status of the operation. If more than one data needs to be written, repeat the steps of (3), (4), (5) and (6).
   (7). Re-enter the safe mode: SAFE_MOD = 55h; SAFE_MOD = 0AAh.
   (8). Set the global configuration register (GLOBAL_CFG) to start write protection (bCODE_WE=0, bDATA_WE=0).

3. Read the Data Flash data area to read the single-byte data from the target address:
   (1). Set the address register (ROM_ADDR), to write a 16-bit target address, and the actual offset addresses of 00H-7FH must be shifted 1 bit left to become even addresses, and the final addresses are C000H/C002H/C004... in sequence.
   (2). Set the operation control register (ROM_CTRL) to 08Eh, to execute read operation, and the

program is automatically paused during operation.

(3). After the operation is completed, the program resumes running. In this case, you can inquire bROM_CMD_ERR in the status register (ROM_STATUS) to check the status of the operation. If the command is valid, the read 8-bit data will be saved in the data register (ROM_DATA_L).

(4). If more than one data needs to be read, repeat the steps of (1), (2) and (3).

4. Read flash-ROM:

Directly use MOVC command, or read the code or data of the target address through the pointer to the program address space.

6.6 On-board program and ISP download

When Code_Protect=1, the codes in CH554 flash-ROM and the data in Data Flash can be read and written by an external programmer through the synchronous serial interface. When Code_Protect=0, the codes in the flash-ROM and the data in Data Flash are protected and cannot be read out, but can be erased. And the code protection will be removed after the code is erased and powered on again.

When the CH554 is preset with BootLoader program, it supports various ISP downloading types such as USB or UART to load the applications. But in the absence of BootLoader program, the boot loader program or application can only be written to CH554 by an external dedicated programmer. To support on-board programming, 5V supply voltage must be used temporarily, and 4 connection pins between the CH554 and the programmer should be reserved in the circuit. The necessary connecting pins are P1.4, P1.6 and P1.7.

Table 6.6.1 Connection pins to the programmer

Pin	GPIO	Pin description
RST	RST	Reset control pin in programming status, it is allowed to get into the programming status at high level
SCS	P1.4	Chip Select input pin in programming status (necessary), high level by default, active at low level
SCK	P1.7	Clock input pin in programming status (necessary)
MISO	P1.6	Data output pin in programming status (necessary)

Notes: Whenever programming on board or downloading program via UART or USB, 5V supply voltage must be used temporarily.

6.7 Unique ID

Each MCU has a unique ID when it is delivered from the factory, namely the chip identification number. The ID is 5 bytes in total and stored in the addresses from 3FFAH to 3FFFH of Configuration Information area. The 3FFBH address is reserved. The 3FFCH address and the 3FFEH address each occupies 16 bits and the 3FFAH address occupies 8 bits, and they are combined into 40-bit chip ID.

Table 6.7.1 Chip ID address table

Program space address	ID data description
3FFAh , 3FFBh	ID last word data, corresponding to the highest byte and the reserved byte of the 40-bit ID in sequence
3FFCh , 3FFDh	ID first word data, corresponding to the lowest byte and the second lowest byte

	of the ID in sequence
3FFEh , 3FFFh	ID secondary word data, corresponding to the secondary high byte and the high byte of the ID in sequence

This ID can be obtained by reading the Code Flash. The ID number can be used with the downloading tools to encrypt the target program. For the general application, only the first 32 bits of the ID number are used, i.e. the 8-bit data of the 3FFAH address can be ignored.

7. Power control, sleep and reset

7.1 External power Ipnput

The CH554 has a built-in low dropout voltage regulator of 5V~3.3V, it supports external 5V or 3.3V or even 2.8V supply voltage input. Refer to the following table for the two supply voltage input modes.

External supply voltage	VCC pin voltage: 3V to 5V external voltage	V33 pin voltage: 3.3V internal voltage
3.3V or 3V including less than 3.6V	Input external 3.3V voltage to voltage regulator, Must be connected with a decoupling capacitor (not less than 0.1uF) to ground.	Input external 3.3V as internal working power. Must be connected with a decoupling capacitor (not less than 0.1uF) to ground.
5V including more than 3.6V	Input external 5V voltage to voltage regulator, Must be connected with a decoupling capacitor (not less than 0.1uF) to ground.	Internal voltage regulator 3.3V output and 3.3V internal working power input, Must be connected with a decoupling capacitor (not less than 0.1uF) to ground.

After power on or system reset, CH554 is in running state by default. On the premise that the performance meets the requirements, the power consumption can be reduced during operation by appropriately reducing the system clock frequency. When CH554 does not need to run at all, PD in PCON can be set to enter the sleep state. In the sleep state, external wakeup can be implemented via USB, UART0, UART1, SPI0 and part of GPIOs.

7.2 Power supply and sleep control register

Table 7.2.1 Power supply and sleep control registers

Name	Address	Description	Reset value
WDOG_COUNT	FFh	Watchdog count register	00h
RESET_KEEP	FEh	Reset keep register	00h
WAKE_CTRL	A9h	Wakeup control register	00h
PCON	87h	Power control register	10h

Watchdog count register (WDOG_COUNT):

Bit	Name	Access	Description	Reset value

[7:0]	WDOG_COUNT	RW	Current count of watchdog. It overflows when the count is full from 0FFh to 00h, and the bWDOG_IF_TO interrupt flag is automatically set to 1 during overflow.	00h

Reset keep register (RESET_KEEP):

Bit	Name	Access	Description	Reset value
[7:0]	RESET_KEEP	RW	Reset keep register. The value can be modified manually and will not be affected by any other reset except for power on reset.	00h

Wakeup control register (WAKE_CTRL), only can be written in safe mode:

Bit	Name	Access	Description	Reset value
7	bWAK_BY_USB	RW	USB event wake-up enable Wakeup is disabled if the bit is 0.	0
6	bWAK_RXD1_LO	RW	UART1 receive input low level wakeup enable Wakeup is disabled if the bit is 0. Select either RXD1 or RXD1_ based on bUART1_PIN_X=0/1	0
5	bWAK_P1_5_LO	RW	P1.5 low level wakeup enable Wakeup is disabled if the bit is 0.	0
4	bWAK_P1_4_LO	RW	P1.4 low level wakeup enable Wakeup is disabled if the bit is 0.	0
3	bWAK_P1_3_LO	RW	P1.3 low level wakeup enable Wakeup is disabled if the bit is 0.	0
2	bWAK_RST_HI	RW	RST high level wakeup enable Wakeup is disabled if the bit is 0.	0
1	bWAK_P3_2E_3L	RW	P3.2 edge change and P3.3 low level wakeup enable Wakeup is disabled if the bit is 0.	0
0	bWAK_RXD0_LO	RW	UART0 receive input low level wakeup enable Wakeup is disabled if the bit is 0. Select either RXD0 or RXD0_ pin based on bUART0_PIN_X=0/1	0

Power control register (PCON):

Bit	Name	Access	Description	Reset value
7	SMOD	RW	When the UART0 baud rate is generated by timer1, select the communication baud rate of UART0 mode 1, 2 and 3: 0: Slow mode. 1: Fast mode.	0

6	Reserved	RO	Reserved	0
5	bRST_FLAG1	RO	Last reset flag high bit	0
4	bRST_FLAG0	RO	Last reset flag low bit	1
3	GF1	RW	General flag bit 1 User-defined. Reset and set by software	0
2	GF0	RW	General flag bit 0 User-defined. Reset and set by software	0
1	PD	RW	Sleep mode enable. Sleep after set to 1. Automatically reset by hardware after wakeup.	0
0	Reserved	RO	Reserved	0

Table 7.2.2 Last reset flag description

bRST_FLAG1	bRST_FLAG0	Reset flag description
0	0	Software reset Source: bSW_RESET=1 and (bBOOT_LOAD=0 or bWDOG_EN=1)
0	1	Power on reset Source: VCC pin voltage lower than detection level.
1	0	Watchdog reset Source: bWDOG_EN=1 and watchdog timeout overflows.
1	1	External pin manual reset Source: En_RST_RESET=1 and RST input high level.

7.3 Reset control

CH554 has 4 reset sources: power on reset, external reset, software reset, and watchdog reset. The last three are thermal resets.

7.3.1 Power on reset

The power on reset (POR) is generated by the on-chip voltage detection circuit. The POR circuit continuously monitors the supply voltage of VCC pin. When it is lower than the detection level Vpot, the power on reset will be generated, and the hardware will automatically delay Tpor to remain the reset state. After the delay, CH554 will run.

Only power on reset can enable CH554 to reload the configuration information and reset RESET_KEEP, other thermal resets do not affected it.

7.3.2 External reset

The external reset is generated by the high level applied to the RST pin. The reset process is triggered when En_RST_RESET is 1, and the high level duration on the RST pin is greater than Trst. When the external high level signal is canceled, the hardware will automatically delay Trdl to remain the reset state. After the delay, CH554 will be executed from address 0.

7.3.3 Software reset

CH554 supports internal software reset, so that the CPU can be actively reset and re-run without external intervention. Set bSW_RESET in global configuration register (GLOBAL_CFG) to 1 to reset the software, and automatically delay Trdl to remain the reset state. After the delay, CH554 executes from address0, and the bSW_RESET bit can be reset automatically by hardware.

When bSW_RESET is set to 1, if bBOOT_LOAD=0 or bWDOG_EN=1, then bRST_FLAG1/0 after reset will indicate a software reset. When bSW_RESET is set to 1, if bBOOT_LOAD=1 and bWDOG_EN=0, then bRST_FLAG1/0 will remain the previous reset flag rather than generate a new one.

For a chip with ISP boot loader, after power on reset, firstly run the boot loader, and the program will reset the chip via software as needed to switch to the application state. Such software reset only cause reset of bBOOT_LOAD, and do not affect bRST_FLAG1/0 state (due to bBOOT_LOAD = 1 before reset), so when switching to the application state, bRST_FLAG1/0 still indicate the power on reset state.

7.3.4 Watchdog reset

Watchdog reset is generated when the watchdog timer overflows. The watchdog timer is an 8-bit counter, whose clock frequency of its counts is Fsys/65536, and the overflow signal is generated when the count reaches 0FFh to 00h.

The watchdog timer overflow signal triggers the interrupt flag (bWDOG_IF_TO) to 1, which is automatically reset when WDOG_COUNT is reloaded or entering the corresponding interrupt service program.

Different timing cycles (Twdc) are available by writing different count initial values to WDOG_COUNT. If the system clock frequency is 6 MHz, the watchdog timing cycle (Twdc) is about 2.8s when 00h is written, and about 1.4s when 80h is written. The timing cycle is halved if the system clock frequency is 12 MHz.

If bWDOG_EN=1 when watchdog timer overflows, watchdog reset is generated and automatically delay Trdl to remain reset. After the delay, CH554 executes from address0.

When bWDOG_EN=1, to avoid watchdog reset, WDOG_COUNT must be reset timely to avoid overflow.

8. System clock

8.1 Clock block diagram

Figure 8.1.1 Clock system and structure diagram

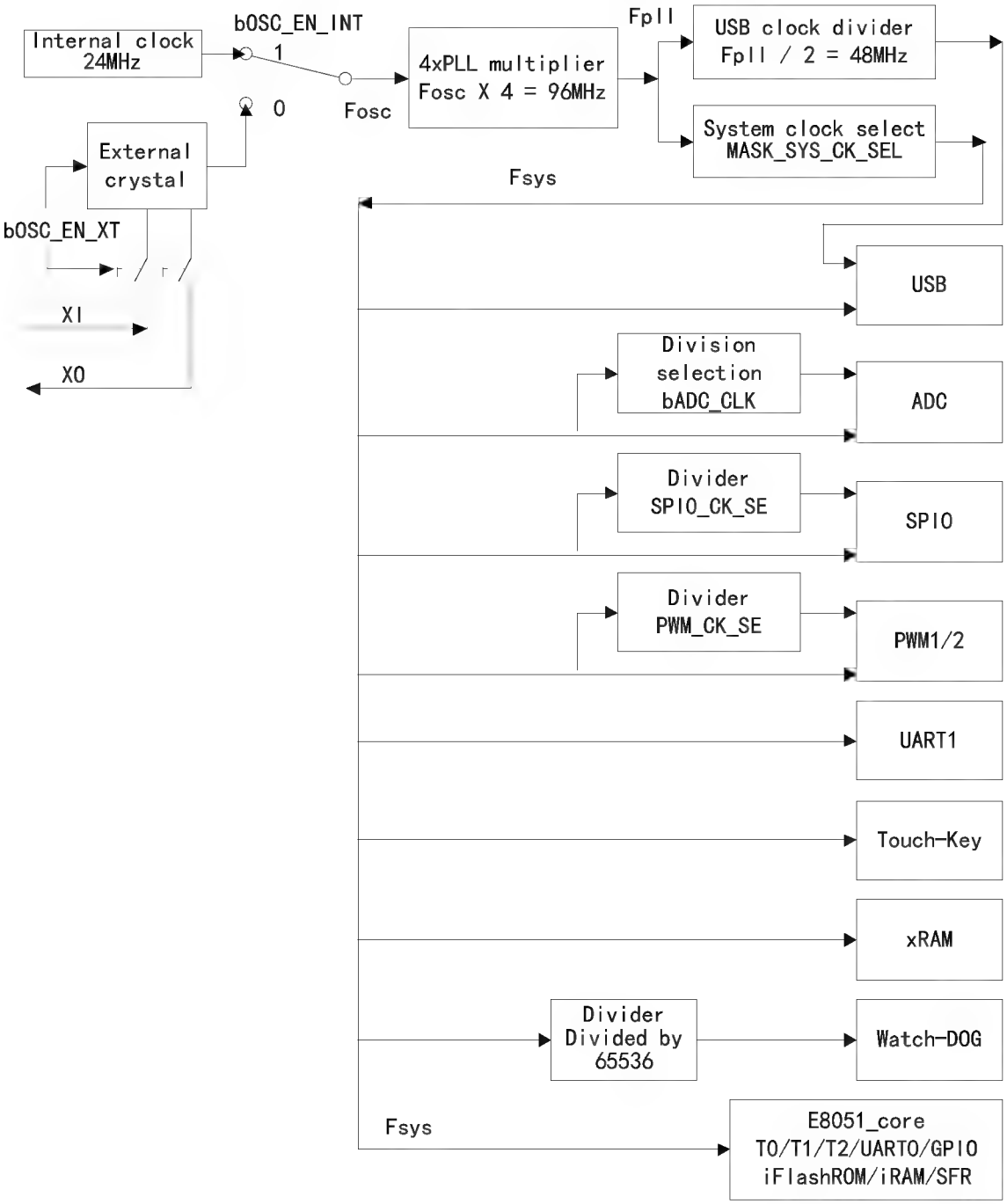

After the internal clock or external clock is alternatively selected as the original clock (Fosc), Fpll high frequency clock is generated after 4xPLL, and finally the system clock (Fsys) and USB module clock (Fusb4x) are respectively obtained via the 2 dividers. The system clock (Fsys) is directly provided for each module of CH554.

8.2 Register description

Table 8.2.1 Clock control register

Name	Address	Description	Reset value
CLOCK_CFG	B9h	System clock configuration register	83h

System clock configuration register (CLOCK_CFG), only can be written in safe mode:

Bit	Name	Access	Description	Reset value
7	bOSC_EN_INT	RW	Internal clock oscillator enable 1: Internal clock oscillator enabled, and the internal clock selected. 0: Internal clock oscillator disabled, and the external crystal oscillator selected to provide the clock.	1
6	bOSC_EN_XT	RW	External crystal oscillator enable. 1: P1.2/P1.3 pin used as XI/XO, and the oscillator enabled. A quartz crystal or ceramic oscillator needs to be externally connected between the XI and XO. 0: External oscillator disabled.	0
5	bWDOG_IF_TO	RO	Watch dog timer interrupt flag 1: Interrupt triggered by the timer overflow signal. 0: No interrupt. The bit is automatically reset when the watchdog count register (WDOG_COUNT) is reloaded or after entering the corresponding interrupt service program	0
4	bROM_CLK_FAST	RW	flash-ROM reference clock frequency selection: 0: Normal (Fosc>=16MHz). 1: Speed up (Fosc<16MHz)	0
3	bRST	R0	RST pin status input bit	0
[2:0]	MASK_SYS_CK_SEL	RW	System clock selection. Refer to the Table 8.2.2 below.	011b

Table 8.2.2 System clock frequency selection

MASK_SYS_CK_SEL	System clock frequency (Fsys)	Relation with crystal frequency (Fxt)	Fsys when Fosc=24MHz
000	Fpll / 512	Fxt / 128	187.5KHz
001	Fpll / 128	Fxt / 32	750KHz
010	Fpll / 32	Fxt / 8	3MHz
011	Fpll / 16	Fxt / 4	6MHz
100	Fpll / 8	Fxt / 2	12MHz
101	Fpll / 6	Fxt / 1.5	16MHz
110	Fpll / 4	Fxt / 1	24MHz
111	Fpll / 3	Fxt / 0.75	Reserved, disabled

8.3 Clock configuration

The internal clock is used by default after the CH554 is powered on, and the internal clock frequency is 24MHz. Select either an internal clock or an external crystal oscillator clock through CLOCK_CFG. If the external crystal oscillator is turned off, the XI and XO pins can be used as P1.2 and P1.3 general-purpose I/O ports. If an external crystal oscillator is used to provide the clock, the crystal should be cross connected

between the XI and XO pins, and the oscillating capacitors should be connected to GND with the XI and XO pins respectively. If the clock signal is input directly from the outside, it should be input from the XI pin with the XO pin suspended.

Source clock frequency: Fosc = bOSC_EN_INT ? 24MHz: Fxt
PLL frequency: Fpll = Fosc * 4 = 96MHz
USB clock frequency: Fusb4x = Fpll / 2 = 48MHz
The system clock frequency (Fsys) Reference Table 8.2.2 is obtained by Fpll frequency division
In default state after reset, Fosc=24MHz, Fpll=96MHz, Fusb4x=48MHz, and Fsys=6MHz.

Steps for switching to the external crystal oscillator to provide the clock are as follows:
(1). Enter the safe mode: step one SAFE_MOD = 55h; step two SAFE_MOD = AAh.
(2). Set bOSC_EN_XT in CLOCK_CFG to 1 with "OR" operation, other bits remain unchanged, to enable crystal oscillator.
(3). Delay several milliseconds, usually 5mS ~ 10mS, to wait for the crystal oscillator to work steadily.
(4). Re-enter the safe mode: step one SAFE_MOD = 55h; step two SAFE_MOD = AAh.
(5). Reset bOSC_EN_INT in CLOCK_CFG to 0 with "AND" operation, other bits remain unchanged, to switch to an external clock.
(6). Terminate safe mode: write any value into SAFE_MOD to prematurely terminate the safe mode.

Steps for modifying the system clock frequency are as follows:
(1). Enter the safe mode: step one SAFE_MOD = 55h; step two SAFE_MOD = AAh.
(2). Write new value to CLOCK_CFG.
(3). Terminate safe mode: write any value into SAFE_MOD to prematurely terminate the safe mode.

Notes:
(1). If the USB module is used, the Fusb4x must be 48 MHz. In addition, when the full-speed USB is used, the system clock frequency (Fsys) is not less than 6 MHz. When the low-speed USB is used, the system clock frequency (Fsys) is not less than 1.5 MHz.
(2). A lower system clock frequency (Fsys) is preferred to be used to reduce the system dynamic power consumption and widen the operating temperature range.
(3). The internal clock oscillator is powered by V33 power, so V33 voltage variations, especially low voltages will affect the internal clock frequency.

9. Interrupt

The CH554 supports 14 sets of interrupt signal sources, including 6 sets of interrupts (INT0, T0, INT1, T1, UART0 and T2) compatible with the standard MCS51, and 8 sets of extended interrupts (SPI0, TKEY, USB, ADC, UART1, PWMX, GPIO and WDOG). The GPIO interrupt can be selected from 7 I/O pins.

9.1 Register description

Table 9.1.1 Interrupt vector table

Interrupt source	Entry address	Interrupt No.	Description	Default priority sequence
INT_NO_INT0	0x0003	0	External interrupt 0	High priority
INT_NO_TMR0	0x000B	1	Timer0 interrupt	↓

INT_NO_INT1	0x0013	2	External interrupt 1	↓
INT_NO_TMR1	0x001B	3	Timer1 interrupt	↓
INT_NO_UART0	0x0023	4	UART0 interrupt	↓
INT_NO_TMR2	0x002B	5	Timer2 interrupt	↓
INT_NO_SPI0	0x0033	6	SPI0 interrupt	↓
INT_NO_TKEY	0x003B	7	Touch key timer interrupt	↓
INT_NO_USB	0x0043	8	USB interrupt	↓
INT_NO_ADC	0x004B	9	ADC interrupt	↓
INT_NO_UART1	0x0053	10	UART1 interrupt	↓
INT_NO_PWMX	0x005B	11	PWM1/PWM2 interrupt	↓
INT_NO_GPIO	0x0063	12	GPIO Interrupt	Low priority
INT_NO_WDOG	0x006B	13	Watchdog timer interrupt	

Table 9.1.2 Interrupt related registers

Name	Address	Description	Reset value
IP_EX	E9h	Extend interrupt priority control register	00h
IE_EX	E8h	Extend interrupt enable register	00h
GPIO_IE	C7h	GPIO interrupt enable register	00h
IP	B8h	Interrupt priority control register	00h
IE	A8h	Interrupt enable register	00h

Interrupt enable register (IE):

Bit	Name	Access	Description	Reset value
7	EA	RW	Global interrupt enable bit 1: Interrupt enabled when E_DIS is 0; 0: All interrupts requests are masked.	0
6	E_DIS	RW	Global interrupt disable bit 1: All interrupts requests are masked. 0: Interrupt enabled when EA is 1. This bit is usually used to disable interrupt temporarily during flash-ROM operation	0
5	ET2	RW	Timer 2 interrupt enable bit 1: T2 interrupt enabled. 0: Interrupt request is masked.	0
4	ES	RW	UART0 interrupt enable bit 1: UART0 interrupt enabled. 0: Interrupt request is masked.	0
3	ET1	RW	Timer 1 interrupt enable bit 1: T1 interrupt enabled. 0: Interrupt request is masked.	0

2	EX1	RW	External interrupt 1 enable bit 1: INT1 interrupt enabled. 0: Interrupt request is masked.	0
1	ET0	RW	Timer 0 interrupt enable bit 1: T0 interrupt enabled. 0: Interrupt request is masked.	0
0	EX0	RW	External interrupt 0 enable bit 1: INT0 interrupt enabled. 0: Interrupt request is masked.	0

Extend interrupt enable register (IE_EX):

Bit	Name	Access	Description	Reset value
7	IE_WDOG	RW	Watchdog timer interrupt enable bit 1: WDOG interrupt enabled; 0: WDOG interrupt disabled.	0
6	IE_GPIO	RW	GPIO interrupt enable bit 1: GPIO_IE interrupt enabled; 0: GPIO_IE interrupt disabled.	0
5	IE_PWMX	RW	PWM1/PWM2 interrupt enable bit 1: PWM1/2 interrupt enabled; 0: PWM1/2 interrupt disabled.	0
4	IE_UART1	RW	UART1 interrupt enable bit 1: UART1 interrupt enabled; 0: UART1 interrupt disabled.	0
3	IE_ADC	RW	ADC interrupt enable bit 1: ADC interrupt enabled; 0: ADC interrupt disabled.	0
2	IE_USB	RW	USB interrupt enable bit 1: USB interrupt enabled; 0: USB interrupt disabled.	0
1	IE_TKEY	RW	Touch key timer interrupt enable bit 1: Touch key timer interrupt enabled; 0: Touch key timer interrupt disabled.	0
0	IE_SPI0	RW	SPI0 interrupt enable bit 1: SPI0 interrupt enabled; 0: SPI0 interrupt disabled.	0

GPIO interrupt enable register (GPIO_IE):

Bit	Name	Access	Description	Reset value
7	bIE_IO_EDGE	RW	GPIO edge interrupt mode enable: 0: Level interrupt mode selected. If the GPIO pin inputs a valid level, bIO_INT_ACT is 1 and always requests interrupt. If GPIO inputs an invalid level, bIO_INT_ACT is 0 and the interrupt request is canceled. 1: Edge interrupt mode selected. When GPIO pin inputs a valid edge, the bIO_INT_ACT interrupt flag is generated and an interrupt is requested. The interrupt flag cannot be cleared by software and can only be cleared automatically when reset or in level interrupt mode or when it enters the corresponding interrupt service program.	0
6	bIE_RXD1_LO	RW	1: UART1 receive pin interrupt enabled (active at low level in level mode, while active at falling edge in edge mode); 0: UART1 receive pin interrupt disabled. Select either RXD1 or RXD1_ based on bUART1_PIN_X=0/1	0
5	bIE_P1_5_LO	RW	1: P1.5 interrupt enabled (active at low level in level mode, while active at falling edge in edge mode); 0: P1.5 interrupt disabled.	0
4	bIE_P1_4_LO	RW	1: P1.4 interrupt enabled (active at low level in level mode, while active at falling edge in edge mode); 0: P1.4 interrupt disabled.	0
3	bIE_P1_3_LO	RW	1: P1.3 interrupt enabled (active at low level in level mode, while active at falling edge in edge mode); 0: P1.3 interrupt disabled.	0
2	bIE_RST_HI	RW	1: RST interrupt enabled (active at high level in level mode, while active at rising edge in edge mode); 0: RST interrupt disabled.	0
1	bIE_P3_1_LO	RW	1: P3.1 interrupt enabled (active at low level in level mode, while active at falling edge in edge mode); 0: P3.1 interrupt disabled.	0
0	bIE_RXD0_LO	RW	1: UART0 receive pin interrupt enabled (active at low level in level mode, while active at falling edge in edge mode). 0: UART0 receive pin interrupt disabled. Select either RXD0 or RXD0_ pin based on bUART0_PIN_X=0/1	0

Interrupt priority control register (IP):

Bit	Name	Access	Description	Reset value
7	PH_FLAG	RO	Flag bit for high-priority interrupt in progress	0
6	PL_FLAG	RO	Flag bit for low-priority interrupt in progress	0

5	PT2	RW	Timer2 interrupt priority control bit	0
4	PS	RW	UART0 interrupt priority control bit	0
3	PT1	RW	Timer1 interrupt priority control bit	0
2	PX1	RW	External interrupt 1 interrupt priority control bit	0
1	PT0	RW	Timer0 interrupt priority control bit	0
0	PX0	RW	External interrupt 0 interrupt priority control bit	0

Extend interrupt priority control register (IP_EX):

Bit	Name	Access	Description	Reset value
7	bIP_LEVEL	RO	Current interrupt nesting level flag bit 0: No interrupt, or 2-level nested interrupt. 1: Currently, 1-level nested interrupt.	0
6	bIP_GPIO	RW	GPIO interrupt priority control bit	0
5	bIP_PWMX	RW	PWM1/PWM2 interrupt priority control bit	0
4	bIP_UART1	RW	UART1 interrupt priority control bit	0
3	bIP_ADC	RW	ADC interrupt priority control bit	0
2	bIP_USB	RW	USB interrupt priority control bit	0
1	bIP_TKEY	RW	Touch key timer interrupt priority control bit	0
0	bIP_SPI0	RW	SPI0 interrupt priority control bit	0

IP and IP_EX registers are used to set the interrupt priority. If a bit is set to 1, then the corresponding interrupt source is set to high-priority. If a bit is reset, then the corresponding interrupt source is set to low-priority. For the interrupt sources at the same level, the system has a priority sequence by default, as shown in Table 9.1.1. And the combination of PH_FLAG and PL_FLAG represents the priority of the current interrupt.

Table 9.1.3 Current interrupt priority state

PH_FLAG	PL_FLAG	Interrupt priority state at present
0	0	No interrupt at present
0	1	Low-riority interrupt is executed at present
1	0	High-priority interrupt is executed at present
1	1	Unexpected state, unknown error

10. I/O ports

10.1 Introduction to GPIO

CH554 provides up to 17 I/O pins, some of which have alternate functions. Among these pins, the P1 port and the P3 port can be accessed by bits. The P2 port is an internal port and is only used to cooperate with R0 or R1 to select the xRAM page for MOVX access.

If a pin is not configured with alternate functions, it is a general-purpose I/O pin by default. When used as general-purpose digital I/O ports, all of the, have a real "read-modify-write" function that allows SETB, CLR and other bit operation commands to independently change the direction and port level of a pin.

10.2 GPIO register

All registers and bits in this section are represented in a general format: a lowercase "n" represents the serial number of the ports (n=1 or 3), and a lowercase "x" represents the serial number of the bits (x=0, 1, 2, 3, 4, 5, 6, 7).

Table 10.2.1 GPIO registers

Name	Address	Description	Reset value
P1	90h	P1 port input/output register	FFh
P1_MOD_OC	92h	P1 port output mode register	FFh
P1_DIR_PU	93h	P1 port direction control and pull-up enable register	FFh
P2	A0h	P2 port output register	FFh
P3	B0h	P3 port input/output register	FFh
P3_MOD_OC	96h	P3 port output mode register	FFh
P3_DIR_PU	97h	P3 port direction control and pull-up enable register	FFh
PIN_FUNC	C6h	Pin function selection register	80h
XBUS_AUX	A2h	Bus auxiliary setting register	00h

Pn port input/output register (Pn):

Bit	Name	Access	Description	Reset value
[7:0]	Pn.0～Pn.7	RW	Pn.x pin state input and data output bits, accessed by bits	FFh

Pn port output mode register (Pn_MOD_OC):

Bit	Name	Access	Description	Reset value
[7:0]	Pn_MOD_OC	RW	Pn.x pin output mode setting: 0: Push-pull output. 1: Open-drain output.	FFh

Pn port direction control and pull-up enable register (Pn_DIR_PU):

Bit	Name	Access	Description	Reset value
[7:0]	Pn_DIR_PU	RW	Pn.x pin direction control in push-pull output mode: 0: Input. 1: Output. Pn.x pin pull-up resistor enable control in open-drain output mode: 0: Pull-up resistor disabled. 1: Pull-up resistor enabled.	FFh

Relevant configuration of Pn port is realized by the combination of Pn_MOD_OC[x] and Pn_DIR_PU[x] as follows.

Table 10.2.2 Port configuration register combination

Pn_MOD_OC	Pn_DIR_PU	Working mode description
0	0	High impedance input mode, pin has no pull-up resistor
0	1	Push-pull output mode, has symmetrical drive capability which can output or absorb large current
1	0	Open-drain output, support high impedance input, pin has no pull-up resistor
1	1	Quasi-bidirectional mode (standard 8051), open-drain output, support input, pin has pull-up resistor, when the output is changed from low level to high level, it will automatically drive the high level of 2 clock cycles to accelerate the conversion

The P1 port and the P3 port support input-only, push-pull output and quasi-bidirectional modes, etc. Each pin has a freely controlled internal pull-up resistor, and a protective diode connected to VCC and GND.

Figure10.2.1 shows the equivalent schematic of pin P1.x. If AIN is removed, it can be applied to P3 port. The VCC in the figure can be applied to P3.6 and P3.7 after changed to V33, that is, the pull-up or input or output high level of P3.6 and P3.7 can only reach V33 voltage.

P3.6 and P3.7 optional standard pull-up resistor (to V33), 15KΩ pull-down resistor, or provide 1.5KΩ pull-up resistor for one pin (to V33). The standard pull-up resistor is only valid when bUSB_IO_EN=0, i.e. in GPIO mode, controlled by bit7 and bit6 in P3_DIR_PU; the pull-down resistor is controlled by bUD_PD_DIS and bUH_PD_DIS when bUC_RESET_SIE=0, and has no connection with bUSB_IO_EN; 1.5KΩ pull-up resistor is prior to the pull-down resistor, controlled by the bUC_DEV_PU_EN when bUC_RESET_SIE = 0, and has no connection with bUSB_IO_EN.

Figure 10.2.1 I/O pin equivalent schematic

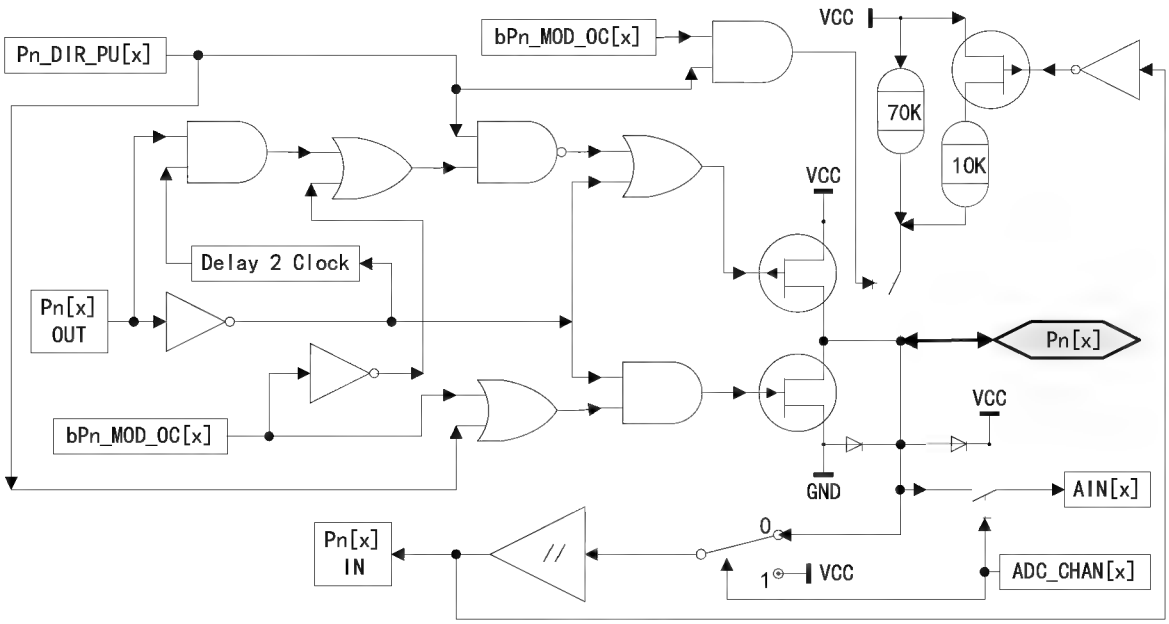

10.3 GPIO alternate functions and map

Some I/O pins of CH554 have alternate functions. After power on, they are all general purpose I/O pins by default. After different functional modules are enabled, the corresponding pins are configured as corresponding function pins of each functional module.

Pin function selection register (PIN_FUNC):

Bit	Name	Access	Description	Reset value
7	bUSB_IO_EN	RW	USB UDP/UDM pin enable bit 0: P3.6/P3.7 selected for GPIO. P3_DIR_PU can be used to control pull-up resistor, and P3_MOD_OC is supported. 1: P3.6/P3.7 selected for UDP/UDM, controlled by USB module, and P3_DIR_PU and P3_MOD_OC both have no effect on it.	1
6	bIO_INT_ACT	R0	GPIO interrupt request activation status: When bIE_IO_EDGE=0, 1: GPIO inputs valid level and requests interrupt. 0: Invalid input level. When bIE_IO_EDGE=1, this bit is used as the edge interrupt flag, 1: Valid edge detected, and the bit cannot be reset by software and can only be reset automatically in reset or level interrupt mode or when entering the corresponding interrupt service program.	0
5	bUART1_PIN_X	RW	UART1 pin mapping enable bit 0: P1.6/P1.7 selected for RXD1/TXD1. 1: P3.4/P3.2 selected for RXD1/TXD1.	0
4	bUART0_PIN_X	RW	UART0 pin mapping enable bit 0: P3.0/P3.1 selected for RXD0/TXD0. 1: P1.2/P1.3 selected for RXD0/TXD0.	0
3	bPWM2_PIN_X	RW	PWM2 pin mapping enable bit 0: P3.4 selected for PWM2. 1: P3.1 selected for PWM2.	0
2	bPWM1_PIN_X	RW	PWM1 pin mapping enable bit 0: P1.5 selected for PWM1. 1: P3.0 selected for PWM1.	0
1	bT2EX_PIN_X	RW	T2EX/CAP2 pin mapping enable bit 0: P1.1 selected for T2EX/CAP2. 1: RST selected for T2EX/CAP2.	0
0	bT2_PIN_X	RW	T2/CAP1 pin mapping enable bit 0: P1.0 selected for T2/CAP1. 1: P1.4 selected for T2/CAP1.	0

Table 10.4.1 GPIO pin alternate functions

GPIO	Other functions: priority sequence from left to right
RST	RST , bT2EX_ , bCAP2_ , bRST
P1[0]	T2/bT2 , CAP1/bCAP1 , TIN0 , P1.0
P1[1]	T2EX/bT2EX , CAP2/bCAP2 , TIN1 , VBUS2 , AIN0 , P1.1
P1[2]	XI , RXD_/bRXD_ , P1.2
P1[3]	XO , TXD_/bTXD_ , P1.3
P1[4]	T2_/bT2_ , CAP1_/bCAP1_ , SCS/bSCS , TIN2 , UCC1 , AIN1 , P1.4
P1[5]	MOSI/bMOSI , PWM1/bPWM1 , TIN3 , UCC2 , AIN2 , P1.5
P1[6]	MISO/bMISO , RXD1/bRXD1 , TIN4 , P1.6
P1[7]	SCK/bSCK , TXD1/bTXD1 , TIN5 , P1.7
P3[0]	PWM1_/bPWM1_ , RXD/bRXD , P3.0
P3[1]	PWM2_/bPWM2_ , TXD/bTXD , P3.1
P3[2]	TXD1_/bTXD1_ , INT0/bINT0 , VBUS1 , AIN3 , P3.2
P3[3]	INT1/bINT1 , P3.3
P3[4]	PWM2/bPWM2 , RXD1_/bRXD1_ , T0/bT0 , P3.4
P3[5]	T1/bT1 , P3.5
P3[6]	UDP/bUDP , P3.6
P3[7]	UDM/bUDM , P3.7

The priority sequence from left to right mentioned in the above table refers to the priority when multiple functional modules compete to use the GPIO. For example, when P3.1 is used for TXD serial port transmission, P3.0 can still be used for higher priority PWM1 output.

11. External bus

CH554 does not provide bus signals outside the chip, does not support the external bus, but can normally access the on-chip xRAM.

External bus auxiliary setting register (XBUS_AUX):

Bit	Name	Access	Description	Reset value
7	bUART0_TX	R0	UART0 transmit status If this bit is 1, the transmission is in progress.	0
6	bUART0_RX	R0	UART0 receive status If this bit is 1, the reception is in progress.	0
5	bSAFE_MOD_ACT	R0	Safe mode activate status If this bit is 1, it is in safe mode currently.	0
4	Reserved	RO	Reserved	0
3	GF2	RW	General flag bit 2	0

			User-defined. Reset and set by software	
2	bDPTR_AUTO_INC	RW	Enable the DPTR to add 1 automatically after on the completion of MOVX_@DPTR command	0
1	Reserved	RO	Reserved	0
0	DPS	RW	Double DPTR data pointer selection bit: 0: DPTR0 selected; 1: DPTR1 selected.	0

12. Timer

12.1 Timer0/1

Timer0 and Timer1 are 16-bit timers/counters configured by TCON and TMOD. TCON is used for timer/counter T0 and T1 startup control and overflow interrupt as well as external interrupt control. Each timer is a 16-bit timing unit composed of dual 8-bit registers. The high byte counter of timer 0 is TH0 and the low byte counter of timer 0 is TL0. The high byte counter of timer 1 is TH1 and the low byte counter of timer 1 is TL1. Timer 1 can also be used as the baud rate generator of UART0.

Table 12.1.1 Timer0/1 related registers

Name	Address	Description	Reset value
TH1	8Dh	Timer1 count high byte	xxh
TH0	8Ch	Timer0 count high byte	xxh
TL1	8Bh	Timer1 count low byte	xxh
TL0	8Ah	Timer0 count low byte	xxh
TMOD	89h	Timer0/1 mode register	00h
TCON	88h	Timer0/1 control register	00h

Timer/counter 0/1 control register (TCON):

Bit	Name	Access	Description	Reset value
7	TF1	RW	Timer1 overflow interrupt flag bit Automatically cleared after it enters Timer1 interrupt.	0
6	TR1	RW	Timer1 startup/stop bit Set to 1 to startup. Set and cleared by software.	0
5	TF0	RW	Timer0 overflow interrupt flag bit Automatically cleared after it enters Timer0 interrupt.	0
4	TR0	RW	Timer0 startup/stop bit Set to 1 to startup. Set and cleared by software.	0
3	IE1	RW	INT1 interrupt request flag bit Automatically cleared after entering INT1 interrupt.	0
2	IT1	RW	INT1 trigger mode control bit 0: INT1 triggered by low level; 1: INT1 triggered by falling edge.	0

1	IE0	RW	INT0 interrupt request flag bit Automatically cleared after it enters INT0 interrupt.	0
0	IT0	RW	INT0 trigger mode control bit 0: INT0 triggered by low level; 1: INT0 triggered by falling edge.	0

Timer/counter 0/1 mode register (TMOD):

Bit	Name	Access	Description	Reset value
7	bT1_GATE	RW	Gate control enable bit. This bit controls whether the Timer1 startup is affected by INT1. 0: Whether the timer/counter 1 is started is independent of INT1. 1: It is started only when the INT1 pin is at high level and TR1 is 1.	0
6	bT1_CT	RW	Timing/counting mode selection bit 0: It works in timing mode. 1: It works in counting mode. Falling edge on T1 pin selected as the clock.	0
5	bT1_M1	RW	Timer/counter 1 mode selection high bit	0
4	bT1_M0	RW	Timer/counter 1 mode selection low bit	0
3	bT0_GATE	RW	Gate control enable bit. This bit controls whether the Timer0 startup is affected by INT0. 0: Whether the timer/counter 0 is started is independent of INT0. 1: It is started only when the INT0 pin is at high level and TR0 is 1	0
2	bT0_CT	RW	Timing/counting mode selection bit 0: It works in timing mode. 1: It works in counting mode. Falling edge on T0 pin selectd as the clock	0
1	bT0_M1	RW	Timer/counter 0 mode selection high bit	0
0	bT0_M0	RW	Timer/counter 0 mode selection low bit	0

Table 12.1.2 Timern working mode selected by configuring bTn_M1 and bTn_M0 (n=0,1)

bTn_M1	bTn_M0	Timern working mode (n=0,1)
0	0	Mode0: 13-bit timer/counter n, the counting unit is composed of the lower 5 bits of TLn and THn, and the higher 3 bits of TLn is invalid. When the counts of all 13 bits change from 1 to 0, set the overflow flag TFn and reset the initial value
0	1	Mode1: 16-bit timer/counter n, the counting unit is composed of TLn and THn. When the counts of all 16 bits change from 1 to 0, set the overflow flag TFn and reset the initial value
1	0	Mode2: 8-bit overload timer/counter n, TLn is used for the counting unit, and THn is used as the overload counting unit. When the counts of all 8 bits change from 1 to 0, set the overflow flag TFn and automatically load the initial value from THn
1	1	Mode3: For timer/counter 0, it is divided into TL0 and TH0. TL0 is used as an 8-bit

		timer/counter, which occupies all control bits of Timer0. TH0 is also used as an 8-bit timer, which occupies TR1, TF1 and interrupt resources of Timer1. In this case, Timer1 is still available, but the startup control bit (TR1) and the overflow flag bit (TF1) cannot be used. For timer/counter 1, it stops after it enters mode 3.

Timern count low byte (TLn) (n=0, 1):

Bit	Name	Access	Description	Reset value
[7:0]	TLn	RW	Timern count low byte	xxh

Timern count high byte (THn) (n=0, 1):

Bit	Name	Access	Description	Reset value
[7:0]	THn	RW	Timern count high byte	xxh

12.2 Timer2

Timer2 is a 16-bit automatic overload timer/counter configured by T2CON and T2MOD registers, with TH2 as the high byte counter and TL2 as the low byte counter for Timer2. Timer2 can be used as the baud rate generator of UART0, and it also has the function of 2-channel signal level capture. The capture count is stored in RCAP2 and T2CAP1 registers.

Table 12.2.1 Timer2 related registers

Name	Address	Description	Reset value
TH2	CDh	Timer2 counter high byte	00h
TL2	CCh	Timer2 counter low byte	00h
T2COUNT	CCh	TL2 and TH2 constitute a 16-bit SFR	0000h
T2CAP1H	CFh	Timer2 capture 1 data high byte (read only)	xxh
T2CAP1L	CEh	Timer2 capture 1 data low byte (read only)	xxh
T2CAP1	CEh	T2CAP1L and T2CAP1H constitute a 16-bit SFR	xxxxh
RCAP2H	CBh	Count reload/capture 2 data register high byte	00h
RCAP2L	CAh	Count reload/capture 2 data register low byte	00h
RCAP2	CAh	RCAP2L and RCAP2H constitute a 16-bit SFR	0000h
T2MOD	C9h	Timer2 mode register	00h
T2CON	C8h	Timer2 control register	00h

Timer/counter 2 control register (T2CON):

Bit	Name	Access	Description	Reset value
7	TF2	RW	Timer2 overflow interrupt flag when bT2_CAP1_EN=0	0

			When the Timer2 counts of all 16 bits change from 1 to 0, this overflow flag is set to 1, which requires software to reset. When RCLK=1 or TCLK=1, the bit is not set to 1.	
7	CAP1F	RW	Timer2 capture 1 interrupt flag when bT2_CAP1_EN=1 It is triggered by the active edge on T2, which requires software to reset.	0
6	EXF2	RW	Timer2 external trigger flag It is triggered by T2EX active edge and set to 1 when EXEN2=1, which requires software to reset.	0
5	RCLK	RW	UART0 receive clock selection 0: Timer1 overflow pulse selected to generate the baud rate; 1: Timer2 overflow pulse selected to generate the baud rate.	0
4	TCLK	RW	UART0 transmit clock selection 0: Timer1 overflow pulse selected to generate the baud rate; 1: Timer2 overflow pulse selected to generate the baud rate.	0
3	EXEN2	RW	T2EX trigger enable bit 0: Ignore T2EX. 1: Reload or capture enabled to be triggered by T2EX active edge	0
2	TR2	RW	Timer2 startup/stop bit Set to 1 to start. Set and cleared by software.	0
1	C_T2	RW	Timer2 clock source selection bit 0: Internal clock selected. 1: Edge count based on falling edge on T2 pin selected.	0
0	CP_RL2	RW	Timer2 function selection bit. It should be forced to be 0 if RCLK or TCLK is 1. 0: Timer2 selected as timer/counter to automatically reload the initial value of the count when the counter overflows or T2EX level changes; 1: Timer2 capture 2 function enabled, and the valid edge of T2EX captured.	0

Timer/counter 2 mode register (T2MOD):

Bit	Name	Access	Description	Reset value
7	bTMR_CLK	RW	Fastest clock mode enable of T0/T1/T2 timer which has selected fast clock. 1: Fsys without division as the count clock. 0: Divided clock selected. This bit has no effect on the timer that selects the standard clock.	0
6	bT2_CLK	RW	Timer2 internal clock frequency selection bit 0: Standard clock selected. Fsys/12 when in timing/counting	0

			mode. Fsys/4 when in UART0 clock mode. 1: Fast clock selected. Fsys/4 (bTMR_CLK=0) or Fsys (bTMR_CLK=1) when in timing/counting mode. Fsys/2 (bTMR_CLK=0) or Fsys (bTMR_CLK=1) when in UART0 clock mode.		
5	bT1_CLK	RW	Timer1 internal clock frequency selection bit 0: Standard clock selected, Fsys/12. 1: Fast clock selected. Fsys/4 (bTMR_CLK=0) or Fsys (bTMR_CLK=1).		0
4	bT0_CLK	RW	Timer0 internal clock frequency selection bit 0: Standard clock selected, Fsys/12. 1: Fast clock selected, Fsys/4 (bTMR_CLK=0) or Fsys (bTMR_CLK=1)		0
3	bT2_CAP_M1	RW	Timer2 capture mode high bit	Capture mode selection: X0: From falling edge to falling edge 01: From any edge to any edge, i.e. level change 11: From rising edge to rising edge	0
2	bT2_CAP_M0	RW	Timer2 capture mode low bit		0
1	T2OE	RW	Timer2 clock output enable bit 0: Output disabled. 1: T2 pin enabled to output clock. The frequency is the half of the Timer2 overflow rate.		0
0	bT2_CAP1_EN	RW	Capture 1 mode enable when RCLK=0, TCLK=0, CP_RL2=1, C_T2=0 and T2OE=0 1: Capture 1 function enabled. Active edge on T2 is captured. 0: Capture 1 function disabled.		0

Count reload/capture 2 data register (RCAP2):

Bit	Name	Access	Description	Reset value
[7:0]	RCAP2H	RW	High byte of reload value in timer/counter mode. High byte of timer captured by CAP2 in capture mode.	00h
[7:0]	RCAP2L	RW	Low byte of reload value in timer/counter mode. Low byte of timer captured by CAP2 in capture mode.	00h

Timer2 counter (T2COUNT):

Bit	Name	Access	Description	Reset value
[7:0]	TH2	RW	Current counter high byte	00h
[7:0]	TL2	RW	Current counter low byte	00h

Timer2 capture 1 data (T2CAP1):

Bit	Name	Access	Description	Reset value
[7:0]	T2CAP1H	RO	High byte of timer captured by CAP1	xxh
[7:0]	T2CAP1L	RO	Low byte of timer captured by CAP1	xxh

12.3 PWM function

CH554 provides 2-channel 8-bit PWM, the default output polarity can be selected by default as low level or high level for PWM, and the output duty cycle of PWM can be dynamically modified; after integrating low-pass filtering via simple Resistor-Capacitor (RC), various output voltages can be obtained, which is equivalent to the low speed Digital-to-Analog Converter (DAC).

PWM1 output duty cycle= PWM_DATA1 / 256, support range from 0% to 99.6%.
PWM2 output duty cycle= PWM_DATA2 / 256, support range from 0% to 99.6%.

In practical application, it is recommended to allow the PWM pin output and set the PWM output pin in push-pull output mode.

12.3.1 PWM1 and PWM2

Table 12.3.1 PWM1 and PWM2 related registers

Name	Address	Description	Reset value
PWM_CK_SE	9Eh	PWM clock setting register	00h
PWM_CTRL	9Dh	PWM control register	02h
PWM_DATA1	9Ch	PWM1 data register	xxh
PWM_DATA2	9Bh	PWM2 data register	xxh

PWM2 data register (PWM_DATA2):

Bit	Name	Access	Description	Reset value
[7:0]	PWM_DATA2	RW	Store the current PWM2 data, Duty cycle of PWM2 output valid level =PWM_DATA2/256	xxh

PWM1 data register (PWM_DATA1):

Bit	Name	Access	Description	Reset value
[7:0]	PWM_DATA1	RW	Store the current PWM1 data, Duty cycle of PWM1 output valid level =PWM_DATA1/256	xxh

PWM control register (PWM_CTRL):

Bit	Name	Access	Description	Reset value
7	bPWM_IE_END	RW	1: PWM cycle end or MFM buffer interrupt enabled	0
6	bPWM2_POLAR	RW	PWM2 output polarity control bit	0

			0: Low level by default while active high. 1: High level by default while active low.	
5	bPWM1_POLAR	RW	PWM1 output polarity control bit 0: Low level by default while active high. 1: High level by default while active low.	0
4	bPWM_IF_END	RW	PWM cycle period end interrupt flag bit 1: A PWM cycle period end interrupt. Write 1 to reset, or reset when the PWM_DATA1 data is reloaded.	0
3	bPWM2_OUT_EN	RW	PWM2 output enable 1: PWM2 output enabled.	0
2	bPWM1_OUT_EN	RW	PWM1 output enable 1: PWM1 output enabled.	0
1	bPWM_CLR_ALL	RW	1: Empty PWM1 and PWM2 count and FIFO. Reset by software.	1
0	Reserved	RO	Reserved	0

PWM clock setting register (PWM_CK_SE):

Bit	Name	Access	Description	Reset value
[7:0]	PWM_CK_SE	RW	Set PWM clock frequency division factor	00h

12.4 Timer function

12.4.1 Timer0/1

(1). Set T2MOD to select Timer internal clock frequency. If bTn_CLK(n=0/1) is 0, the corresponding clock of Timer0/1 is Fsys/12. If bTn_CLK is 1, select either Fsys/4 or Fsys as the clock based on bTMR_CLK=0 or 1.

(2). Set TMOD to configure the working mode of Timer.

Mode0: 13-bit timer/counter

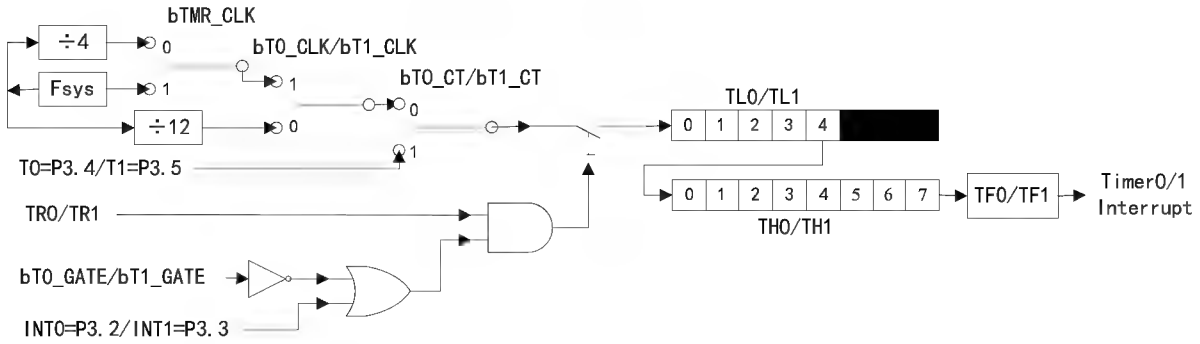

Figure12.4.1.1 Timer0/1 mode0

Mode1: 16-bit timer/counter

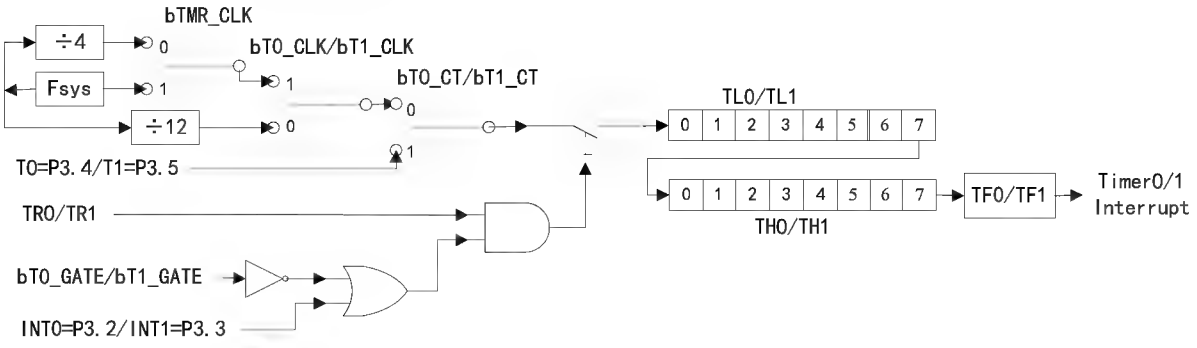

Figure12.4.1.2 Timer0/1 mode1

Mode2: Auto reload 8-bit timer/counter

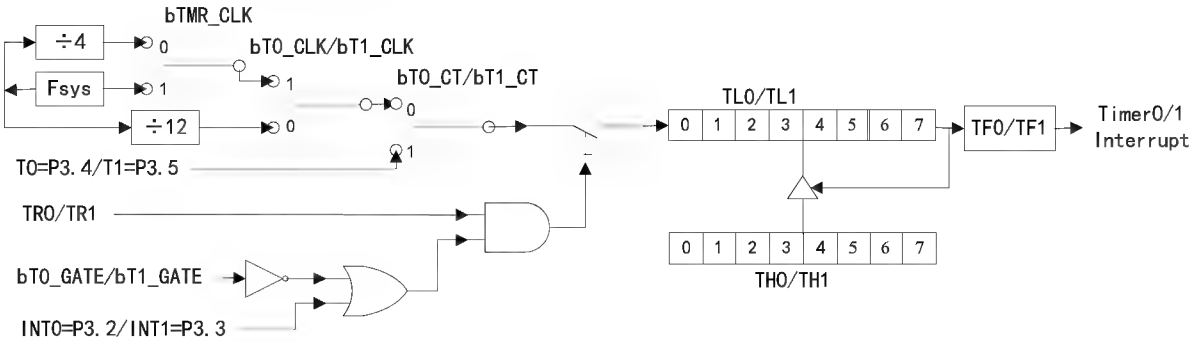

Figure12.4.1.3 Timer0/1 mode2

Mode3: Timer0 is divided into 2 independent 8-bit timer/counter and borrows the TR1 control bit of Timer1. Timer1 substitutes the borrowed TR1 control bit by whether starting mode 3, and stops running when it enters mode 3.

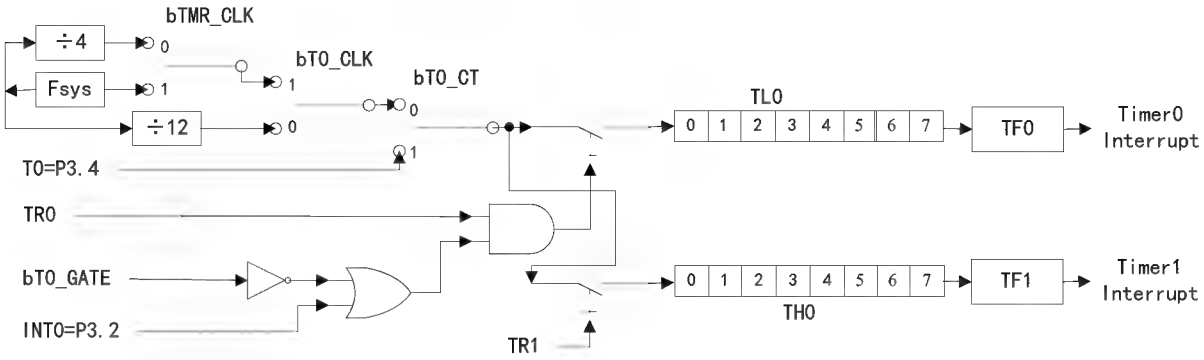

Figure12.4.1.4 Timer0 mode3

(3). Set initial value TLn and THn(n=0/1) of timer/counter.

(4). Set the TRn bit (n=0/1) in TCON to turn on or stop timer/counter, which can be checked by querying the TFn bit (n=0/1) or by interrupt mode.

12.4.2 Timer2

Timer2 16-bit reload timer/counter mode:

(1). Set the RCLK bit and the TCLK bit in T2CON to 0, to select non-UART baud rate generator mode.

(2). Set the C_T2 bit in T2CON to 0, to select the internal clock, and turn to step (3). Alternatively, set to 1 to select the falling edge on T2 pin as the count clock and skip step (3).
(3). Set T2MOD to select the Timer internal clock frequency. If bT2_CLK is 0, Timer2 clock is Fsys/12. If bT2_CLK is 1, either Fsys/4 or Fsys is selected as the clock by bTMR_CLK=0 or 1.
(4). Set the CP_RL2 bit in T2CON to 0, to select 16-bit reload timer/counter function of Timer2.
(5). Set RCAP2L and RCAP2H as the reload value of timer after overflow. Set TL2 and TH2 as the initial value of the timer (the same as RCAP2L and RCAP2H generally). Set TR2 to 1 to turn on Timer2.
(6). Inquire TF2 or Timer2 interrupt to obtain the current timer/counter state.

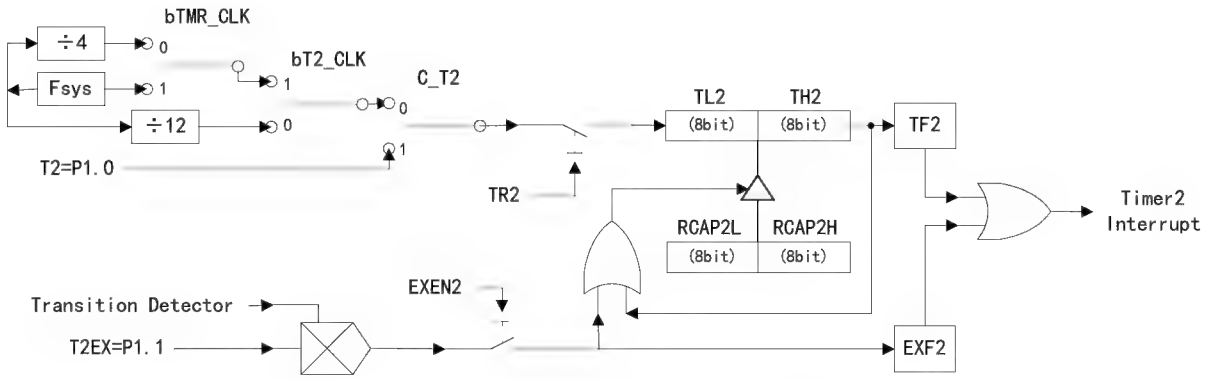

Figure12.4.2.1 Timer2 16-bit reload Timer/Counter

Timer2 clock output mode:
Refer to the 16-bit reload timer/counter mode and then set the T2OE bit in T2MOD to 1 to enable a two divided-frequency clock of TF2 frequency output from T2 pin.

Timer2 UART0 baud rate generator mode:
(1). Set the C_T2 bit in T2CON to 0, to select the internal clock. Alternatively, set to 1 to select the falling edge on T2 pin as the clock. Set the RCLK and TCLK bits in T2CON to 1, or set one of them to 1 as required, to select UART baud rate generator mode.
(2). Set T2MOD to select Timer internal clock frequency. If bT2_CLK is 0, the clock of Timer2 is Fsys/4. If bT2_CLK is 1, select either Fsys/2 or Fsys as the clock based on bTMR_CLK=0 or 1.
(3). Set RCAP2L and RCAP2H as the reload value of timer after overflow. Set TR2 to 1 to turn on Timer2.

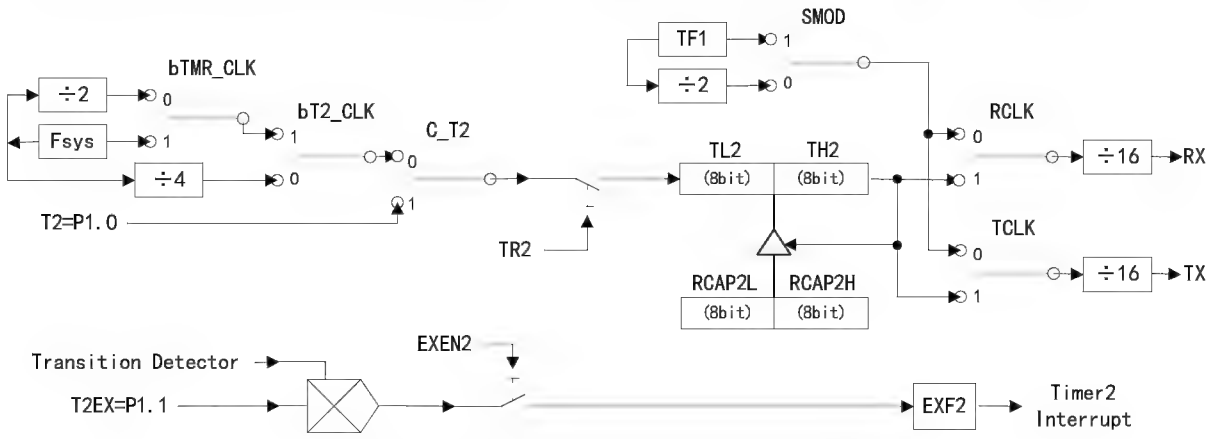

Figure12.4.2.2 Timer2 UART0 baud rate generator

Timer2 two-channel capture mode:
(1). Set the RCLK bit and the TCLK bit in T2CON to 0, to select non-UART baud rate generator mode.

(2). Set the C_T2 bit in T2CON to 0, to select internal clock, and turn to step (3). Alternatively, set to 1 to select the falling edge on T2 pin as the count clock and skip step (3).

(3). Set T2MOD to select the Timer internal clock frequency. If bT2_CLK is 0, Timer2 clock is Fsys/12. If bT2_CLK is 1, either Fsys/4 or Fsys is selected as the clock based on bTMR_CLK=0 or 1.

(4). Set the bT2_CAP_M1 bit and the bT2_CAP_M0 bit in T2MOD, to select corresponding edge capture mode.

(5). Set the CP_RL2 bit in T2CON to 1, to select the capture function of Timer2 to T2EX pin.

(6). Set TL2 and TH2 as the initial value of the timer, and set TR2 to 1 to turn on Timer2.

(7). When CAP2 capture is completed, RCAP2L and RCAP2H store the current count values of TL2 and TH2 and set EXF2 to generate an interrupt. The difference between the next captured RCAP2L and RCAP2H and the last captured RCAP2L and RCAP2H is the signal width between the two active edges.

(8). If the C_T2 bit in T2CON is 0, and the bT2_CAP1_EN bit in T2MOD is 1, Timer2 is enabled to capture the T2 pin at the same time. When the CAP1 capture is completed, T2CAP1L and T2CAP1H store the current count values of TL2 and TH2, and set CAP1F to generate an interrupt.

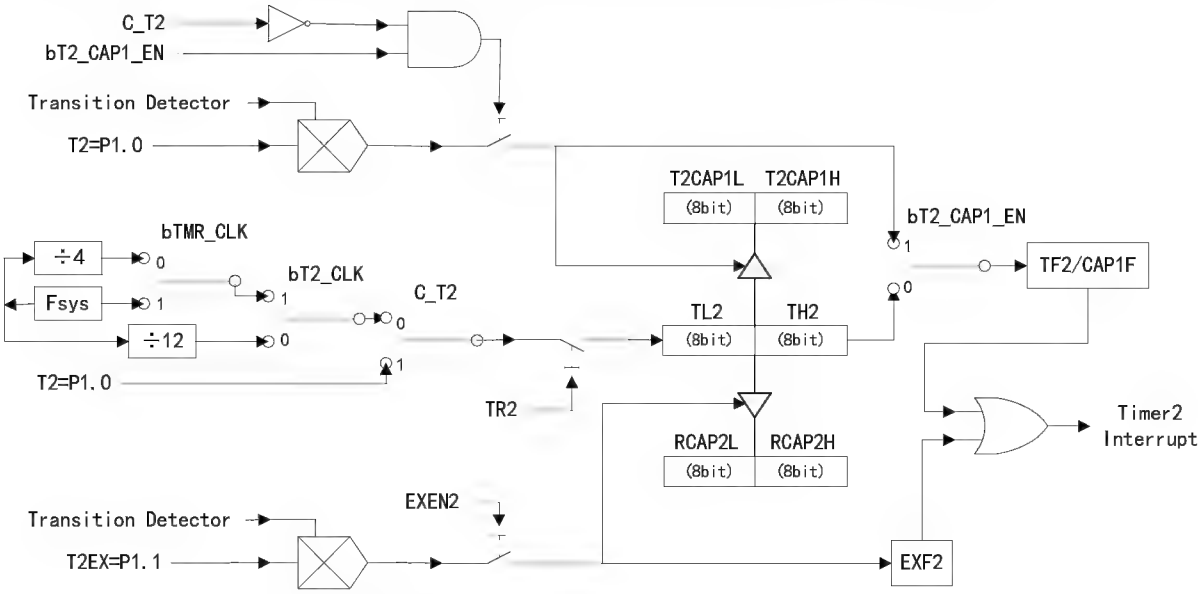

Figure12.4.2.3 Timer2 capture mode

13. Universal asynchronous receiver transmitter (UART)

13.1 Introduction to UART

CH554 provides 2 full-duplex UARTs: UART0 and UART1.

UART0 is a standard MCS51 serial port, whose data reception and transmission are realized by physically separated receive/transmit registers via SBUF access. The data written to SBUF is loaded into the transmit register. And the receive buffer register is used for read operation on SBUF.

UART1 is a simplified MCS51 serial port, whose data reception and transmission are realized by physically separated receive/transmit registers via SBUF access. The data written to SBUF1 is loaded into the transmit register. And the receive buffer register is used for read operation on SBUF1. Compared with UART0, UART1 lacks the multi-device communication mode and fixed baud rate, but UART1 has an independent baud rate generator.

13.2 UART register

Table 13.2.1 UART related registers

Name	Address	Description	Reset value
SCON	98h	UART0 control register	00h
SBUF	99h	UART0 data register	xxh
SCON1	C0h	UART1 control register	40h
SBUF1	C1h	UART1 data register	xxh
SBAUD1	C2h	UART1 baud rate setting register	xxh

13.2.1 UART0 register description

UART0 control register (SCON):

Bit	Name	Access	Description	Reset value
7	SM0	RW	UART0 working mode selection bit 0 0: 8-bit data asynchronous communication. 1: 9-bit data asynchronous communication	0
6	SM1	RW	UART0 working mode selection bit 1 0: Fixed baud rate. 1: Variable baud rate, which is generated by timer T1 or T2	0
5	SM2	RW	UART0 multi-device communication control bit: In mode 2 and mode 3, When SM2=1, If RB8 is 0, RI is not set to 1 and the reception is invalid. If RB8 is 1, RI is set to 1 and the reception is valid. When SM2=0, no matter RB8 is 0 or 1, RI is set when receiving data and the reception is valid. In mode 1, if SM2=1, only when the active stop bit is received can the reception be valid; In mode 0, the SM2 bit must be set to 0.	0
4	REN	RW	UART0 receive enable bit 0: UART0 receive disabled. 1: UART0 receive enabled.	0
3	TB8	RW	The 9th bit of the transmitted data In modes 2 and mode 3, TB8 is used to write the 9th bit of the transmitted data, which can be a parity bit. In multi-device communication, it is used to indicate whether the host sends an address byte or a data byte. Data byte when TB8=0, and address byte when TB8=1.	0
2	RB8	RW	The 9th bit of the received data In mode 2 and 3, RB8 is used to store the 9th bit of the received data. In mode 1, if SM2=0, RB8 is used to store the received stop bit.	0

			In mode 0, RB8 is not used.	
1	TI	RW	Transmit interrupt flag bit Set by hardware at the end of a data byte transmission. It requires software to reset.	0
0	RI	RW	Receive interrupt flag bit Set by hardware at the end of a data byte reception. It requires software to reset.	0

Table 13.2.1.1 UART0 working mode selection

SM0	SM1	Description
0	0	Mode0, shift register mode. Baud rate is always Fsys/12
0	1	Mode1, 8-bit asynchronous communication. Variable baud rate, generated by timer T1 or T2
1	0	Mode2, 9-bit asynchronous communication. Baud rate is Fsys/128(SMOD=0) or Fsys/32(SMOD=1)
1	1	Mode3, 9-bit asynchronous communication. Variable baud rate, generated by timer T1 or T2

In mode 1 and 3, when RCLK=0 and TCLK=0, UART0 baud rate is generated by timer T1. T1 should be set to mode 2 (auto reload 8-bit timer mode). Both bT1_CT and bT1_GATE must be 0. There are the following cases.

Table 13.2.1.2 Calculation of UART0 baud rate generated by T1

bTMR_CLK	bT1_CLK	SMOD	Description
1	1	0	TH1 = 256 - Fsys / 32 / baud rate
1	1	1	TH1 = 256 - Fsys / 16 / baud rate
0	1	0	TH1 = 256 - Fsys / 4 / 32 / baud rate
0	1	1	TH1 = 256 - Fsys / 4 / 16 / baud rate
X	0	0	TH1 = 256 - Fsys / 12 / 32 / baud rate
X	0	1	TH1 = 256 - Fsys / 12 / 16 / baud rate

In mode1 and mode3, when RCLK=1 or TCLK=1, UART0 baud rate is generated by T2. T2 should be set to 16-bit auto reload baud rate generator mode. Both C_T2 and CP_RL2 must be 0. There are the following cases.

Table 13.2.1.3 Calculation of UART0 baud rate generated from T2

bTMR_CLK	bT2_CLK	Description
1	1	RCAP2 = 65536 - Fsys / 16 / baud rate
0	1	RCAP2 = 65536 - Fsys / 2 / 16 / baud rate
X	0	RCAP2 = 65536 - Fsys / 4 / 16 / baud rate

UART0 data register (SBUF):

Bit	Name	Access	Description	Reset

				value
[7:0]	SBUF	RW	UART0 data register, including the transmit register and the receive register that are physically separated. The transmit data register is used to write data to SBUF, and the receive data register is used to read data from SBUF.	xxh

13.2.2 UART1 register description

UART1 control register (SCON1):

Bit	Name	Access	Description	Reset value
7	U1SM0	RW	UART1 working mode selection bit 0: 8-bit data asynchronous communication. 1: 9-bit data asynchronous communication.	0
6	Reserved	RO	Reserved	1
5	U1SMOD	RW	UART1 communication baud rate selection 0: Slow mode. 1: Fast mode.	0
4	U1REN	RW	UART1 receive enable bit 0: UART1 receive disabled; 1: UART1 receive enabled.	0
3	U1TB8	RW	The 9th bit of the transmitted data In 9-bit data mode, TB8 is used to write the 9th bit of the transmitted data, which can be a parity bit. In 8-bit data mode, TB8 is ignored	0
2	U1RB8	RW	The 9th bit of the received data In 9-bit data mode, RB8 is used to store the 9th bit of the received data. In 8-bit data mode, RB8 is used to store the received stop bit	0
1	U1TI	RW	Transmit interrupt flag bit Set by hardware after a data byte is transmitted. It requires software to reset.	0
0	U1RI	RW	Receive interrupt flag bit Set by hardware after a data byte is received effectively. It requires software to reset.	0

UART1 baud rate is generated by the SBAUD1 setting and can be divided into two cases according to the selection of U1SMOD:

When U1SMOD=0, SBAUD1 = 256 - Fsys / 32 / baud rate;

When U1SMOD=1, SBAUD1 = 256 - Fsys / 16 / baud rate.

UART1 data register (SBUF1):

Bit	Name	Access	Description	Reset value
[7:0]	SBUF1	RW	UART1 data register, including the transmit register and the	xxh

			receive register that are physically separated. The transmit data register to write data to SBUF1, and the receive data register to read data from SBUF1.	

13.3 UART applications

UART0 application:

(1). Select the baud rate generator for UART0, either from timer T1 or T2, and configure corresponding counter.

(2). Enable the timer T1 or T2.

(3). Set SM0, SM1 and SM2 inSCON to select the working mode of serial port 0. Set REN to 1 to enable UART0 reception.

(4). UART interrupt can be set or R1 and T1 interrupt state can be inquired.

(5). Read and write SBUF to realize data reception and transmission of UART, and the allowable baud rate error of the UART receive signal is not more than 2%.

UART1 application:

(1). Select U1SMOD and set SBAUD1 based on the baud rate.

(2). Set U1SM0 in SCON1 to select the working mode of serial port 1. Set U1REN to 1 to enable UART1 reception.

(3). UART1 interrupt can be set or U1RI and U1TI interrupt state can be inquired.

(4). Read and write SBUF1 to implement data reception and transmission of UART1, and the allowable baud rate error of the UART receive signal is not more than 2%.

14. Serial peripheral interface (SPI)

14.1 Introduction to SPI

CH554 provides an SPI interface for high-speed synchronous data transfer with peripherals.

(1). Supports master mode and slave mode.

(2). Clock mode: mode0 and mode3.

(3). Optional, 3-wire full duplex or 2-wire half-duplex mode.

(4). Optional, MSB-first or LSB-first.

(5). Clock frequency is adjustable, up to nearly half of the system clock frequency.

(6). Built-in 1-byte receive FIFO and 1-byte transmit FIFO.

(7). Supports the first byte pre-load data in slave mode to facilitate the host to obtain the returned data immediately in the first byte.

14.2 SPI register

Table 14.2.1 SPI related registers

Name	Address	Description	Reset value
SPI0_SETUP	FCh	SPI0 setup register	00h
SPI0_S_PRE	FBh	SPI0 slave mode preset data register	20h
SPI0_CK_SE	FBh	SPI0 clock setting register	20h
SPI0_CTRL	FAh	SPI0 control register	02h
SPI0_DATA	F9h	SPI0 data receive/transmit register	xxh

SPI0_STAT	F8h	SPI0 status register	08h

SPI0 setup register (SPI0_SETUP):

Bit	Name	Access	Description	Reset value
7	bS0_MODE_SLV	RW	SPI0 master/slave mode selection bit 0: Master mode; 1: Slave mode/device mode.	0
6	bS0_IE_FIFO_OV	RW	FIFO overflow interrupt enable bit in slave mode 1: FIFO overflow interrupt enabled; 0: FIFO overflow does not generate interrupt	0
5	bS0_IE_FIRST	RW	Receive first byte completed interrupt enable bit in slave mode 1: Interrupt triggerred when the first data byte is received in slave mode; 0: Interrupt is not generated when the first byte is received.	0
4	bS0_IE_BYTE	RW	Data byte transfer completed interrupt enable bit 1: Byte transfer completed interrupt enabled; 0: Byte transfer completed interrupt disabled.	0
3	bS0_BIT_ORDER	RW	Order control bit of data byte 0: MSB first; 1: LSB first.	0
2	Reserved	RO	Reserved	0
1	bS0_SLV_SELT	RO	Chip Select activation status bit in slave mode 0: Not selected currently; 1: Being selected currently.	0
0	bS0_SLV_PRELOAD	RO	Pre-load data status bit in slave mode 1: Currently in pre-load state after Chip Select is valid and before the data is transferred.	0

SPI0 clock setting register (SPI0_CK_SE):

Bit	Name	Access	Description	Reset value
[7:0]	SPI0_CK_SE	RW	Set SPI0 clock frequency division factor in master mode	20h

SPI0 preset data register in slave mode (SPI0_S_PRE)

Bit	Name	Access	Description	Reset value
[7:0]	SPI0_S_PRE	RW	Preload first transmitted data in slave mode	20h

SPI0 control register (SPI0_CTRL):

Bit	Name	Access	Description	Reset value
7	bS0_MISO_OE	RW	SPI0 MISO output enable 1: SPI0 MISO output enabled. 0: SPI0 MISO output disabled.	0
6	bS0_MOSI_OE	RW	SPI0 MOSI output enable 1 SPI0 MOSI output enabled. 0: SPI0 MOSI output disabled.	0
5	bS0_SCK_OE	RW	SPI0 SCK output enable 1: SPI0 SCK output enabled. 0: SPI0 SCK output disabled.	0
4	bS0_DATA_DIR	RW	SPI0 data direction control bit 0: Output. Only writing to FIFO is regarded as an effective operation, and an SPI transmission is started. 1: Input. Reading/writing to FIFO is regarded as an effective operation, and an SPI transmission is started.	0
3	bS0_MST_CLK	RW	SPI0 master clock mode control bit 0: Mode 0. SCK defaults to low level when free. 1: Mode 3. SCK defaults to high level.	0
2	bS0_2_WIRE	RW	2-wire half-duplex mode enable bit of SPI0 0: 3-wire full duplex mode (SCK, MOSI and MISO); 1: 2-wire half-duplex mode (SCK, MISO)	0
1	bS0_CLR_ALL	RW	1: Empty SPI0 interrupt flag and FIFO. Reset by software.	1
0	bS0_AUTO_IF	RW	Enable bit that allows automatic clear of byte receive completed interrupt flag through FIFO effective operation 1: Auto clear the byte receive completed interrupt flag (S0_IF_BYTE) during the effective read and write operation of FIFO	0

SPI0 data receive/transmit register (SPI0_DATA):

Bit	Name	Access	Description	Reset value
[7:0]	SPI0_DATA	RW	Including the transmit FIFO and the receive FIFO that are physically separated. The receive FIFO is used for read operation. The transmit FIFO is used for write operation. The valid read/write operation can initiate an SPI transmission	xxh

SPI0 status register (SPI0_STAT):

Bit	Name	Access	Description	Reset value
7	S0_FST_ACT	RO	1: The first byte reception is completed in slave mode.	0

6	S0_IF_OV	RW	FIFO overflow flag bit in slave mode 1: FIFO overflow interrupt; 0: No interrupt. Directly write 0 to reset, or write 1 to the corresponding bit in the register to reset. When bS0_DATA_DIR=0, the transmit FIFO empty triggers interrupt. When bS0_DATA_DIR=1, receive FIFO full triggers interrupt.	0
5	S0_IF_FIRST	RW	First byte receive done interrupt flag bit in slave mode 1: The first byte is received. Directly write 0 to reset, or write 1 to the corresponding bit in the register to reset.	0
4	S0_IF_BYTE	RW	Data byte transmit done interrupt flag bit 1: One byte transmission is done. Directly write 0 to reset, or write 1 to the corresponding bit in the register to reset, or reset by FIFO valid operation when bS0_AUTO_IF=1.	0
3	S0_FREE	RO	SPI0 free flag bit 1: No SPI shift at present, usually it is in free period between the data bytes	1
2	S0_T_FIFO	RO	SPI0 transmit FIFO count. 0 and 1 both are valid.	0
1	Reserved	RO	Reserved	0
0	S0_R_FIFO	RO	SPI0 receive FIFO count. 0 and 1 both are valid.	0

14.3 SPI transfer format

SPI master mode supports two transfer formats, i.e. mode0 and mode3, which can be selected by setting the bSn_MST_CLK bit in SPI control register (SPIn_CTRL). CH554 always samples MISO data on the rising edge of CLK. The data transfer formats are shown in the figures below.

Mode0: bSn_MST_CLK = 0

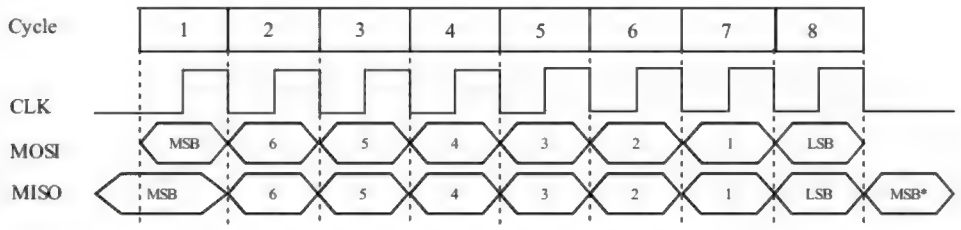

Figure 14.3.1 SPI mode0 timing diagram

Mode3: bSn_MST_CLK = 1

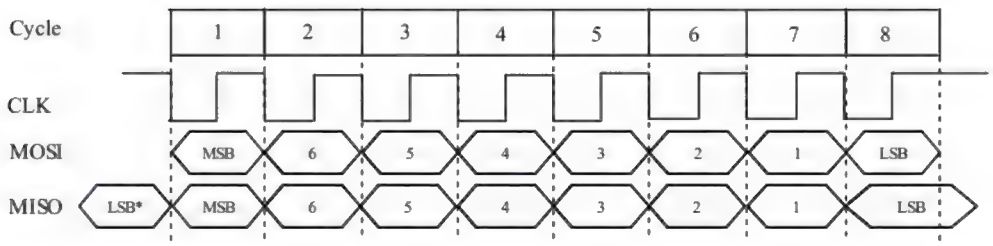

Figure 14.3.2 SPI mode3 timing diagram

14.4 SPI configuration

14.4.1 Master mode

In SPI master mode, SCK pin output serial clock, and Chip Select output pins can be specified as any I/O pins.

SPI0 configuration procedure:

(1) Set the SPI clock setting register (SPI0_CK_SE), to configure SPI clock frequency.

(2). Set the bS0_MODE_SLV bit in the SPI setup register (SPI0_SETUP) to 0, to select Master mode.

(3). Set the bS0_MST_CLK bit in the SPI control register (SPI0_CTRL), to select mode0 or mode3 as required.

(4). Set the bS0_SCK_OE bit and the bS0_MOSI_OE bit in the SPI control register (SPI0_CTRL) to 1, and set the bS0_MISO_OE bit to 0, to set the P1 port direction bSCK and bMOSI to output, bMISO to input, and Chip Select pin to output.

Data transmission:

(1). Write to the SPI0_DATA register, write the data to be sent to FIFO to automatically initiate an SPI transfer.

(2). Wait for S0_FREE to be 1, it indicates that transmission is completed and the transmission of the next byte can be proceeded.

Data reception:

(1). Write to the SPI0_DATA register, write any data to FIFO, e.g. 0FFh, to initiate an SPI transfer.

(2). Wait for S0_FREE to be 1, it indicates that the reception is completed and SPI0_DATA can be read to obtain the received data.

(3). If bS0_DATA_DIR is set to 1 previously, the above read operation still can initiate the next SPI transfer, otherwise it will not start.

14.4.2 Slave mode

Only SPI0 supports Slave mode. In Slave mode, SCK pin is used to receive the serial clock of the connected SPI host.

(1). Set the bS0_MODE_SLV bit in the SPI0 setup register (SPI0_SETUP) to 1, to select slave mode.

(2). Set the bS0_SCK_OE bit and the bS0_MOSI_OE bit in the SPI0 control register (SPI0_CTRL) to 0, and set the bS0_MISO_OE bit to 1, to set the P1 port direction bSCK, bMOSI, bMISO and Chip Select pin to input. When SCS is active (low level), MISO output is automatically enabled. In this case, it is recommended to set MISO pin to high impedance input (P1_MOD_OC[6]=0, P1_DIR_PU[6]=0), so that MISO will not output during invalid Chip Select, which is convenient for sharing SPI bus.

(3). Optionally, set the preset data register (SPI0_S_PRE) in SPI slave mode, to be automatically loaded into the buffer for the first time after Chip Select for external output. After 8 serial clocks, that is, the first byte of data transmission and exchange is completed, CH554 obtains the first byte of data (possibly command code) sent by the external SPI host, and the external SPI host obtains the preset data (possibly the status value) in SPI0_S_PRE through exchange. The bit7 in the SPI0_S_PRE register will be automatically loaded into the MISO pins during the low level period of SCK after the SPI Chip Select is effective. In SPI mode0, if the bit7 in SPI0_S_PRE is preset by CH554, the

external SPI host will obtain the preset value of bit7 in SPI0_S_PRE by inquiring the MISO pins when the SPI Chip Select is effective but there is no data transfer, thereby the value of bit7 in SPI0_S_PRE can be obtained only by the effective SPI Chip Select.

Data transmission:
Inquire S0_IF_BYTE or wait for interrupt. After each SPI data byte transfer, write to the SPI0_DATA register, and write the data to be sent to FIFO. Or wait for S0_FREE to be changed from 0 to 1, and the transmission of the next byte can be proceeded.

Data reception:
Inquire S0_IF_BYTE or wait for interrupt. After each SPI data byte transfer, read the SPI0_DATA register to obtain the received data from FIFO. Inquire S0_R_FIFO to know whether there are remaining bytes in FIFO.

15. Analog-to-digital converter (ADC) and voltage comparator

15.1 Introduction to ADC

CH554 provides an 8-bit analog-to-digital converter, including voltage comparator and ADC module. The converter has 4 analog signal input channels, which allows time-sharing acquisition, and supports 0 to VCC analog input voltage range.

15.2 ADC register

Table 15.2.1 ADC related registers

Name	Address	Description	Reset value
ADC_CTRL	80h	ADC control register	x0h
ADC_CFG	9AH	ADC configuration register	00h
ADC_DATA	9Fh	ADC data register	xxh

ADC control register (ADC_CTRL):

Bit	Name	Access	Description	Reset value
7	CMPO	RO	Result output bit of the voltage comparator 0: Voltage of the positive phase input is lower than that of the inverted input terminal; 1: Voltage of the positive phase input is higher than that of the inverted input terminal.	x
6	CMP_IF	RW	Voltage comparator result change flag 1: Voltage comparator result has changed. Directly write 0 to reset.	0
5	ADC_IF	RW	ADC conversion completion interrupt flag 1: An ADC conversion is completed. Directly write 0 to reset.	0

4	ADC_START	RW	ADC start control bit Set 1 to start an ADC conversion. This bit is reset automatically after ADC conversion is completed.	0
3	CMP_CHAN	RW	Voltage comparator inverted input selection: 0: AIN1; 1: AIN3	0
2	Reserved	RO	Reserved	0
1	ADC_CHAN1	RW	Voltage comparator positive phase input and ADC input channel selection high bit	0
0	ADC_CHAN0	RW	Voltage comparator positive phase input and ADC input channel selection low bit	0

Table 15.2.1 Voltage comparator (CMP) positive input and ADC input channel table

ADC_CHAN1	ADC_CHAN0	Voltage comparator positive input and ADC input channel selection
0	0	AIN0 (P1.1)
0	1	AIN1 (P1.4)
1	0	AIN2 (P1.5)
1	1	AIN3 (P3.2)

ADC configuration register (ADC_CFG):

Bit	Name	Access	Description	Reset value
[7:4]	Reserved	RO	Reserved	0000b
3	ADC_EN	RW	Power enable bit of ADC module 0: Power of ADC disabled, and enter the sleep state; 1: Power enabled.	0
2	CMP_EN	RW	Power enable bit of voltage comparator 0: Power of voltage comparator disabled, and enter the sleep state; 1: Power enabled.	0
1	Reserved	RO	Reserved	0
0	ADC_CLK	RW	ADC reference clock frequency selection bit 0: Slow clock. 384 Fosc cycles required for each ADC; 1: Fast clock. 96 Fosc cycles required for each ADC	0

ADC data register (ADC_DATA):

Bit	Name	Access	Description	Reset value
[7:0]	ADC_DATA	RO	ADC sampling result data	xxh

15.3 ADC function

ADC sampling mode configuration procedure:

(1). Set the ADC_EN bit in ADC_CFG register as 1, to enable ADC module, and set the bADC_CLK selection frequency.
(2). Set ADC_CHAN1/0 in ADC_CTRL register, to select the input channel.
(3). Optional, reset interrupt flag ADC_IF. Optional, if the interrupt mode is used, the interrupt needs to be enabled here.
(4). Set ADC_START in ADC_CTRL register, to start an ADC conversion.
(5). Wait for ADC_START to be changed into 0, or ADC_IF to be set to 1 (if reset to zero before), it indicates that the result data can be read through ADC_DATA after ADC conversion. This data is the value of the input voltage relative to 255 equal parts of the VCC supply voltage, for example, if the result data is 47, it indicates that the input voltage is approximate to 47/255 of the VCC voltage. If the VCC supply voltage is also uncertain, another determined reference voltage value can be measured, and the measured input voltage value and the VCC supply voltage value can be calculated proportionally.
(6). If ADC_START is set again, start the next ADC conversion.

Voltage comparator mode configuration procedure:
(1). Set the CMP_EN bit in ADC_CFG register as 1, to enable the voltage comparator module.
(2). Set ADC_CHAN1/0 and CMP_CHAN in ADC_CTRL register, to select the positive and inverted input channels.
(3). Optional, reset CMP_IF.
(4). You can inquire the status of the CMPO bit at any time to obtain the results of the current comparator.
(5). If the CMP_IF is changed into 1, it indicates that the result of the comparator has changed.

For the above selected analog signal input channel, the GPIO pin where it's located must be set in either high-impedance input mode or open-drain output mode and in output 1 state (equivalent to high-impedance input), Pn_DIR_PU[x]=0, and it is recommended to turn off the pull-up resistor and pull-down resistor.

16. USB controller

16.1 Introduction to USB controller

CH554 is built-in with USB controller and USB receiver-transmitter, with the features as follows:
(1). Support USB Host functions and USB Device functions;
(2). Support USB 2.0 full-speed (12Mbps) and low-speed (1.5Mbps) traffic;
(3). USB control transfer, bulk transfer, interrupt transfer, and synchronous/simultaneous transfer;
(4). Data packet of up to 64 bytes, built-in FIFO, interrupts and DMA.

The USB related registers of CH554 are divided into 3 parts, some of which are reused in the host and device modes.
(1). USB global registers;
(2). USB device controller registers;
(3). USB host controller registers;

16.2 Global register

Table 16.2.1 USB global registers (those marked in grey are controlled by bUC_RESET_SIE reset)

Name	Address	Description	Reset value
USB_C_CTRL	91h	USB type-C configuration channel control register	0000 0000b
USB_INT_FG	D8h	USB interrupt flag register	0010 0000b
USB_INT_ST	D9h	USB interrupt status register (read only)	00xx xxxxb
USB_MIS_ST	DAh	USB miscellaneous status register (read only)	xx10 1000b
USB_RX_LEN	DBh	USB reception length register (read only)	0xxx xxxxb
USB_INT_EN	E1h	USB interrupt enable register	0000 0000b
USB_CTRL	E2h	USB control register	0000 0110b
USB_DEV_AD	E3h	USB device address register	0000 0000b

USB type-C configuration channel control register (USB_C_CTRL):

Bit	Name	Access	Description	Reset value
7	bVBUS2_PD_EN	RW	1: Internal 10K pull-down resistor of VBUS2 pin enabled; 0: Disabled.	0
6	bUCC2_PD_EN	RW	1: Internal 5.1K pull-down resistor of UCC2 pin enabled; 0: Disabled.	0
5	bUCC2_PU1_EN	RW	Internal pull-up resistor control selection high bit of UCC2	0
4	bUCC2_PU0_EN	RW	Internal pull-up resistor control selection low bit of UCC2	0
3	bVBUS1_PD_EN	RW	1: Internal 10K pull-down resistor of VBUS1 pin enable; 0: Disabled.	0
2	bUCC1_PD_EN	RW	1: Internal 5.1K pull-down resistor of UCC1 pin enabled; 0: Disabled.	0
1	bUCC1_PU1_EN	RW	Internal pull-up resistor control selection high bit of UCC1	0
0	bUCC1_PU0_EN	RW	Internal pull-up resistor control selection low bit of UCC1	0

The pull-up resistor inside the UCCn pin is selected by bUCCn_PU1_EN and bUCCn_PU0_EN.

bUCCn_PU1_EN	bUCCn_PU0_EN	Pull-up resistor inside the UCCn pin selection
0	0	Internal pull-up resistor disabled.
0	1	Internal 56KΩ pull-up resistor enabled. Default USB current provided.
1	0	Internal 22KΩ pull-up resistor enabled. 1.5A current provided.
1	1	Internal 10KΩ pull-up resistor enabled. 3A current provided.

The above mentioned USB type-C pull-up resistor and pull-down resistor are independent from the Pn_DIR_PU port direction control and the port pull-up resistor controlled by the pull-up enable register, when a pin is used for USB type-C, the corresponding port pull-up resistor of the pin should be forbidden. It's recommended to enable the high impedance input mode of the pin (to avoid low level or high level

output by the pin).

For detailed control and input detection of USB type-C configuration channels, please refer to USB type-C application commands and routines.

USB interrupt flag register (USB_INT_FG):

Bit	Name	Access	Description	Reset value
7	U_IS_NAK	RO	In USB device mode, 1: NAK busy response received during current USB transmission; 0: Non-NAK response received	0
6	U_TOG_OK	RO	Current USB transmission DATA0/1 synchronization flag matching state 1: Synchronous, and the data is valid; 0: Asynchronous, and the data may be invalid	0
5	U_SIE_FREE	RO	USB protocol processor free bit 0: Busy, and USB transmission is in progress; 1: Free.	1
4	UIF_FIFO_OV	RW	USB FIFO overflow interrupt flag bit 1: FIFO overflow interrupt; 0: No interrupt. Directly write 0 to reset, or write 1 to the corresponding bit in the register to reset.	0
3	UIF_HST_SOF	RW	SOF timing interrupt flag bit in USB host mode 1: SOF timing interrupt, triggered by SOF packet transmission completion; 0: No interrupt. Directly write 0 to reset, or write 1 to the corresponding bit in the register to reset.	0
2	UIF_SUSPEND	RW	USB bus suspend or wakeup event interrupt flag bit 1: There is an interrupt, triggered by USB suspend event or wakeup event; 0: No interrupt. Directly write 0 to reset, or write 1 to the corresponding bit in the register to reset.	0
1	UIF_TRANSFER	RW	USB transfer completed interrupt flag bit 1: Interrupt triggered by a USB transfer completion; 0: No interrupt. Directly write 0 to reset, or write 1 to the corresponding bit in the register to reset.	0
0	UIF_DETECT	RW	USB device connection or disconnection event interrupt flag bit in USB host mode 1: There is an interrupt, triggered by detecting a USB device connection or disconnection;	0

			0: No interrupt. Directly write 0 to reset, or write 1 to the corresponding bit in the register to reset.	
0	UIF_BUS_RST	RW	USB bus reset event interrupt flag bit in USB device mode 1: There is an interrupt, triggered by USB bus reset event; 0: No interrupt. Directly write 0 to reset, or write 1 to the corresponding bit in the register to reset.or write 1 to reset	0

USB interrupt status register (USB_INT_ST):

Bit	Name	Access	Description	Reset value
7	bUIS_IS_NAK	RO	In USB device mode, if the bit is 1, NAK busy response is received during current USB transmission. The same as U_IS_NAK.	0
6	bUIS_TOG_OK	RO	Current USB transmission DATA0/1 synchronization flag matching state 1: Synchronous; 0: Asynchronous. The same as U_TOG_OK.	0
5	bUIS_TOKEN1	RO	Token PID high bit of the current USB transmission transaction in device mode	x
4	bUIS_TOKEN0	RO	Token PID low bit of the current USB transmission transaction in device mode	x
[3:0]	MASK_UIS_ENDP	RO	Endpoint number of the current USB transmission transaction in USB device mode 0000: Endpoint0; ...; 1111: Endpoint15.	xxxxb
[3:0]	MASK_UIS_H_RES	RO	Response PID identification of the current USB transmission transaction in USB host mode 0000: No response or time out; Others: Response PID.	xxxxb

BUIS_TOKEN1 and bUIS_TOKEN0 constitute MASK_UIS_TOKEN, which is used to identify the token PID of the current USB transmission transaction in USB device mode: 00 represents OUT package; 01 represents SOF package; 10 represents IN package; 11 represents SETUP package.

USB miscellaneous status register (USB_MIS_ST):

Bit	Name	Access	Description	Reset value
7	bUMS_SOF_PRES	RO	SOF packet predictive status bit in USB host mode 1: SOF packet is to be sent, and it is automatically delayed if there are other USB data packets.	x

6	bUMS_SOF_ACT	RO	SOF packet transmission state in USB host mode 1: SOF packet is being sent; 0: Transmission is completed, or idle	x
5	bUMS_SIE_FREE	RO	USB protocol processor free bit 0: Busy, and USB transmission is in progress; 1: Free. The same as U_SIE_FREE.	1
4	bUMS_R_FIFO_RDY	RO	USB receive FIFO data ready status bit 0: Receive FIFO is empty; 1: Receive FIFO is not empty.	0
3	bUMS_BUS_RESET	RO	USB bus reset status bit 0: No USB bus reset at present; 1: USB bus reset is in progress.	1
2	bUMS_SUSPEND	RO	USB suspend status bit 0: USB activity at present; 1: There has been no USB activity for some time, request to be suspended.	0
1	bUMS_DM_LEVEL	RO	DM pin status bit in USB host mode when the USB device is just connected to the USB port 0: Low level; 1: High level. This bit is used to judge that it is full-speed or low-speed.	0
0	bUMS_DEV_ATTACH	RO	USB device connection status bit in USB host mode 1: The port has been connected to the USB device; 0: Not connected.	0

USB reception length register (USB_RX_LEN):

Bit	Name	Access	Description	Reset value
[7:0]	bUSB_RX_LEN	RO	The quantity of bytes of the data received by the current USB endpoint	xxh

USB interrupt enable register (USB_INT_EN):

Bit	Name	Access	Description	Reset value
7	bUIE_DEV_SOF	RW	1: USB device mode receive SOF packet interrupt enabled; 0: Disabled.	0
6	bUIE_DEV_NAK	RW	1: USB device mode receive NAK interrupt enabled; 0: Disabled.	0
5	Reserved	RO	Reserved	0
4	bUIE_FIFO_OV	RW	1: FIFO overflow interrupt enabled; 0: Disabled.	0
3	bUIE_HST_SOF	RW	1: USB host mode SOF timing interrupt enabled;	0

			0: Disabled.	
2	bUIE_SUSPEND	RW	1: USB bus suspend/wakeup event interrupt enabled; 0: Disabled.	0
1	bUIE_TRANSFER	RW	1: USB transfer completed interrupt enabled; 0: Disabled.	0
0	bUIE_DETECT	RW	1: USB device connection/disconnection event interrupt enabled in USB host mode; 0: Disabled.	0
0	bUIE_BUS_RST	RW	1: USB bus reset event interrupt enabled in USB device mode; 0: Disabled.	0

USB control register (USB_CTRL):

Bit	Name	Access	Description	Reset value
7	bUC_HOST_MODE	RW	USB working mode selection bit 0: USB device mode; 1: USB host mode.	0
6	bUC_LOW_SPEED	RW	USB bus signal transfer speed selection bit 0: Full speed, 12Mbps; 1: Low speed, 1.5Mbps.	0
5	bUC_DEV_PU_EN	RW	USB device enable and internal pull-up resistor control bit in USB device mode 1: USB device transfer enabled and internal pull-up resistor enabled.	0
5	bUC_SYS_CTRL1	RW	USB system control high bit	0
4	bUC_SYS_CTRL0	RW	USB system control low bit	0
3	bUC_INT_BUSY	RW	Auto pause enable bit before the USB transmission completion interrupt flag is not reset 1: Automatically pause before the interrupt flag (UIF_TRANSFER) is reset. Automatically respond to busy NAK in device mode; 0: Not pause.	0
2	bUC_RESET_SIE	RW	USB protocol processor software reset control bit 1: Forceed to reset the USB protocol processor and most of the USB control registers. Reset by software.	1
1	bUC_CLR_ALL	RW	1: Empty USB interrupt flag and FIFO. Reset by software.	1
0	bUC_DMA_EN	RW	1: USB DMA enabled and DMA interrupt enabled; 0: Disabled.	0

bUC_HOST_MODE, bUC_SYS_CTRL1 and bUC_SYS_CTRL0 constitutes the USB system control combination:

bUC_HOST_MODE	bUC_SYS_CTRL1	bUC_SYS_CTRL0	USB system control description
0	0	0	Disable USB device function, disable internal pull-up resistor
0	0	1	Enable USB device function, enable internal pull-up resistor, and an external pull-up resistor is needed.
0	1	X	Enable USB device function, enable internal 1.5KΩ pull-up resistor This pull-up resistor is prior to the pull-down resistor, and can be used in GPIO mode
1	0	0	Select USB host mode, normal working state
1	0	1	Select USB host mode, force DP/DM output SE0 state
1	1	0	Select USB host mode, force DP/DM output J state
1	1	1	Select USB host mode, force DP/DM output K state/wake up

USB device address register (USB_DEV_AD):

Bit	Name	Access	Description	Reset value
7	bUDA_GP_BIT	RW	USB common flag bit User-defined. Reset or set by software.	0
[6:0]	MASK_USB_ADDR	RW	Address of the USB device being operated in host mode Address of the USB device in device mode	00h

16.3 Device register

In USB device mode, CH554 provides 5 sets of bidirectional endpoints, including endpoint0, endpoint1, endpoint2, endpoint3, and endpoint4. The maximum data packet length of all endpoints is 64 bytes.

Endpoint 0 is the default endpoint and supports control transfer. The transmission endpoint and reception endpoint share a 64-byte data buffer area.

Endpoint1, endpoint2, endpoint3 each includes a transmission endpoint IN and a reception endpoint OUT. The transmission endpoint and the reception endpoint each has a separate 64-byte or double 64-byte data buffer respectively, supporting control transfer, bulk transfer, interrupt transfer, and simultaneous/synchronous transfer.

Endpoint4 includes a transmission endpoint IN and a reception endpoint OUT. The transmission endpoint and the reception endpoint each has a separate 64-byte data buffer respectively, supporting control transfer, bulk transfer, interrupt transfer, and simultaneous/synchronous transfer.

Each group of endpoints has a control register (UEPn_CTRL) and a transmission length register UEPn_T_LEN(n=0/1/2/3/4), which are used to set the synchronization trigger bit of endpoint, the response to OUT transactions and IN transactions and the length of data to be sent.

As the necessary USB bus pull-up resistor of USB device, it can be set whether to be enabled by the software at any time. When bUC_DEV_PU_EN in the USB control register (USB_CTRL) is set to 1, CH554 will internally connect the pull-up resistor with the DP pin or DM pin of the USB bus based on bUD_LOW_SPEED and enable the USB device function.

When a USB bus reset, USB bus suspend or wake-up event is detected, or when the USB successfully processes data transmission or reception, the USB protocol processor will set corresponding interrupt flag and generate an interrupt request. The application program can directly query or query and analyze the interrupt flag register (USB_INT_FG) in the USB interrupt service program, and perform corresponding processing according to UIF_BUS_RST and UIF_SUSPEND; in addition, if UIF_TRANSFER is valid, it is required to continue to analyze the USB interrupt status register (USB_INT_ST), and perform the corresponding processing according to the current endpoint number (MASK_UIS_ENDP) and the current transaction token PID identifier (MASK_UIS_TOKEN). If the synchronization trigger bit (bUEP_R_TOG) of OUT transaction of each endpoint is set in advance, you can judge whether the synchronization trigger bit of the data packet received matches the synchronization trigger bit of the endpoint through U_TOG_OK or bUIS_TOG_OK; if the data are synchronized, the data are valid; if the data are not synchronized, the data should be discarded. After the USB transmission or reception interrupt is processed each time, the synchronization trigger bit of corresponding endpoint should be modified correctly to synchronize the data packet sent next time and detect whether the data packet received next time is synchronized; in addition, bUEP_AUTO_TOG can be set to automatically flip the corresponding synchronization trigger bit after sending or receiving successfully.

The data to be sent by each endpoint is in their own buffer, and the length of the data to be sent is independently set in UEPn_T_LEN; the data received by each endpoint is in their own buffer, but the length of the data received is in the USB reception length register (USB_RX_LEN), and it can be distinguished according to the current endpoint number when the USB is receiving an interrupt.

Table 16.3.1 USB device related registers (those marked in grey are controlled by RB_UC_RESET_SIE reset)

Name	Address	Description	Reset value
UDEV_CTRL	D1h	USB device physical port control register	10xx 0000b
UEP1_CTRL	D2h	Endpoint1 control register	0000 0000b
UEP1_T_LEN	D3h	Endpoint1 transmission length register	0xxx xxxxb
UEP2_CTRL	D4h	Endpoint2 control register	0000 0000b
UEP2_T_LEN	D5h	Endpoint2 transmission length register	0000 0000b
UEP3_CTRL	D6h	Endpoint3 control register	0000 0000b
UEP3_T_LEN	D7h	Endpoint3 transmission length register	0xxx xxxxb
UEP0_CTRL	DCh	Endpoint0 control register	0000 0000b
UEP0_T_LEN	DDh	Endpoint0 transmission length register	0xxx xxxxb
UEP4_CTRL	DEh	Endpoint4 control register	0000 0000b
UEP4_T_LEN	DFh	Endpoint4 transmission length register	0xxx xxxxb

UEP4_1_MOD	EAh	Endpoint1/4 mode control register	0000 0000b
UEP2_3_MOD	EBh	Endpoint2/3 mode control register	0000 0000b
UEP0_DMA_H	EDh	Endpoint0 and endpoint4 buffer start address high byte	0000 00xxb
UEP0_DMA_L	ECh	Endpoint0 and endpoint4 buffer start address low byte	xxxx xxxxb
UEP0_DMA	ECh	UEP0_DMA_L and UEP0_DMA_H constitute a 16-bit SFR	0xxxh
UEP1_DMA_H	EFh	Endpoint1 buffer start address high byte	0000 00xxb
UEP1_DMA_L	EEh	Endpoint1 buffer start address low byte	xxxx xxxxb
UEP1_DMA	EEh	UEP1_DMA_L and UEP1_DMA_H constitute a 16-bit SFR	0xxxh
UEP2_DMA_H	E5h	Endpoint2 buffer start address high byte	0000 00xxb
UEP2_DMA_L	E4h	Endpoint2 buffer start address low byte	xxxx xxxxb
UEP2_DMA	E4h	UEP2_DMA_L and UEP2_DMA_H constitute a 16-bit SFR	0xxxh
UEP3_DMA_H	E7h	Endpoint3 buffer start address high byte	0000 00xxb
UEP3_DMA_L	E6h	Endpoint3 buffer start address low byte	xxxx xxxxb
UEP3_DMA	E6h	UEP3_DMA_L and UEP3_DMA_H constitute a 16-bit SFR	0xxxh

USB device physical port control register (UDEV_CTRL), controlled by bUC_RESET_SIE reset:

Bit	Name	Access	Description	Reset value
7	bUD_PD_DIS	RW	USB device port UDP/UDM pin internal pull-down resistor disable bit 1: Internal pull-down resistor disabled; 0: Internal pull-down resistor enabled. This bit is not controlled by bUSB_IO_EN, and can be used in GPIO mode to provide pull-down resistor.	1
6	Reserved	RO	Reserved	0
5	bUD_DP_PIN	RO	Current UDP pin status 0: Low level; 1: High level.	x
4	bUD_DM_PIN	RO	Current UDM pin status 0: Low level; 1: High level.	x
3	Reserved	RO	Reserved	0
2	bUD_LOW_SPEED	RW	USB device physical port low speed mode enable bit 1: 1.5Mbps low speed mode; 0: 12Mbps full speed mode.	0
1	bUD_GP_BIT	RW	USB device mode common flag bit User-defined. Reset or set by software	0
0	bUD_PORT_EN	RW	USB device physical port enable bit 1: Physical port enabled; 0: Physical port disabled.	0

Endpoint n control register (UEPn_CTRL):

Bit	Name	Access	Description	Reset

				value
7	bUEP_R_TOG	RW	Synchronization trigger bit expected by the receiver of USB endpoint n (handle SETUP/OUT services) 0: Expected DATA0; 1: Expected DATA1	0
6	bUEP_T_TOG	RW	Synchronization trigger bit prepared by the transmitter of USB endpoint n (handle IN services) 0: Transmit DATA0; 1: Transmit DATA1.	0
5	Reserved	RO	Reserved	0
4	bUEP_AUTO_TOG	RW	Synchronization trigger bit auto toggle enable control bit 1: Auto toggle the corresponding synchronization trigger bit after successful transmission or reception; 0: No auto toggle, but manual switch is allowed. Only endpoint1/2/3 supports.	0
3	bUEP_R_RES1	RW	Response control high bit from the receiver of endpoint n to SETUP/OUT transactions	0
2	bUEP_R_RES0	RW	Response control low bit from the receiver of endpoint n to SETUP/OUT transactions	0
1	bUEP_T_RES1	RW	Response control high bit from the transmitter of endpoint n to IN transactions	0
0	bUEP_T_RES0	RW	Response control low bit from the transmitter of endpoint n to IN transactions	0

MASK_UEP_R_RES, consisting of bUEP_R_RES1 and bUEP_R_RES0, is used to control the response of the receiver of endpoint n to the SETUP/OUT transactions: 00 represents reply ACK or ready; 01 represents timeout/no response, which is used to realize real-time/synchronous transmission of non-endpoint0; 10 represents reply NAK or busy; 11 represents reply STALL or error.

MASK_UEP_T_RES, consisting of bUEP_T_RES1 and bUEP_T_RES0, is used to control the response of the transmitter of endpoint n to the IN transactions: 00 represents reply DATA0/DATA1 or data ready or expected ACK; 01 represents reply DATA0/DATA1 and expected no response, which is used to realize real-time/synchronous transmission of non-endpoint0; 10 represents reply NAK or busy; 11 represents reply STALL or error.

Endpoint n transmission length register (UEPn_T_LEN):

Bit	Name	Access	Description	Reset value
[7:0]	bUEPn_T_LEN	RW	Set the number of data bytes that USB endpointn (n=0/1/3/4) is ready to transmit	xxh
	bUEP2_T_LEN		Set the number of data bytes that USB endpoint2 is ready to transmit	00h

USB endpoint1/4 mode control register (UEP4_1_MOD):

Bit	Name	Access	Description	Reset

				value
7	bUEP1_RX_EN	RW	0: Endpoint1 reception disabled; 1: Endpoint1 reception enabled (OUT).	0
6	bUEP1_TX_EN	RW	0: Endpoint1 transmission disabled; 1: Endpoint1 transmission enabled (IN).	0
5	Reserved	RO	Reserved	0
4	bUEP1_BUF_MOD	RW	Endpoint1 data buffer mode control bit	0
3	bUEP4_RX_EN	R0	0: Endpoint4 reception disabled; 1: Endpoint4 reception enabled (OUT).	0
2	bUEP4_TX_EN	RW	0: Endpoint4 transmission disabled; 1: Endpoint4 transmission enabled (IN).	0
[1:0]	Reserved	RO	Reserved	00b

The data buffer modes of USB endpoint0 and endpoint4 are controlled by a combination of bUEP4_RX_EN and bUEP4_TX_EN, refer to the following table.

Table 16.3.2 Endpoint0 and endpoint4 buffer modes

bUEP4_RX_EN	bUEP4_TX_EN	Structure description: arrange from low to high with UEP0 DMA as the start address
0	0	Endpoint0 single 64-byte receive/transmit shared buffers (IN and OUT)
1	0	Endpoint0 single 64-byte receive/transmit shared buffers; endpoint4 single 64-byte receive buffer (OUT)
0	1	Endpoint0 single 64-byte receive/transmit shared buffers; endpoint4 single 64-byte transmit buffer (IN)
1	1	Endpoint0 single 64-byte receive/transmit shared buffers; endpoint4 single 64-byte receive buffer (OUT); endpoint4 single 64-byte transmit buffer (IN). All 192 bytes are arranged as follows: UEP0_DMA+0 address: endpoint0 transceiver; UEP0_DMA+64 address: endpoint4 receiver; UEP0_DMA+128: endpoint4 transmitter.

USB endpoint2/3 mode control register (UEP2_3_MOD):

Bit	Name	Access	Description	Reset value
7	bUEP3_RX_EN	RW	0: Endpoint3 reception disabled; 1: Endpoint3 reception enabled (OUT).	0
6	bUEP3_TX_EN	RW	0: Endpoint3 transmission disabled; 1: Endpoint3 transmission enabled (IN).	0
5	Reserved	RO	Reserved	0
4	bUEP3_BUF_MOD	RW	Endpoint3 data buffer mode control bit	0
3	bUEP2_RX_EN	RO	0: Endpoint2 reception disabled; 1: Endpoint2 reception enabled (OUT).	0

2	bUEP2_TX_EN	RW	0: Endpoint2 transmission disabled; 1: Endpoint2 transmission enabled (IN).	0
1	Reserved	RO	Reserved	0
0	bUEP2_BUF_MOD	RW	Endpoint2 data buffer mode control bit	0

The data buffer modes of USB endpoint1, endpoint2 and endpoint3 are controlled by a combination of bUEPn_RX_EN, bUEPn_TX_EN and bUEPn_BUF_MOD(n=1/2/3) respectively, refer to the following table. In the double-64 byte buffer mode, the first 64 bytes buffer will be selected based on bUEP_*_TOG=0 and the last 64 bytes buffer will be selected based on bUEP_*_TOG=1 during USB data transmission to realize automatic switch.

Table 16.3.3 Endpointn buffer modes (n=1/2/3)

bUEPn_RX_EN	bUEPn_TX_EN	bUEPn_BUF_MOD	Structure description: arrange from low to high with UEPn_DMA as the start address
0	0	x	Endpoint is disabled, and the UEPn_DMA buffer is not used
1	0	0	Single 64-byte receive buffers (OUT)
1	0	1	Double 64-byte receive buffers, selected by bUEP_R_TOG.
0	1	0	Single 64-byte transmit buffers (IN)
0	1	1	Double 64-byte transmit buffers, selected by bUEP_T_TOG.
1	1	0	Single 64-byte receive buffers (OUT); single 64-byte transmit buffers (IN)
1	1	1	Double 64-byte receive buffer, selected by bUEP_R_TOG; double 64-byte transmit buffer, selected by bUEP_T_TOG. All 256 bytes are arranged as follows: UEPn_DMA+0 address: endpoint receiver when bUEP_R_TOG=0; UEPn_DMA+64 address: endpoint receiver when bUEP_R_TOG=1; UEPn_DMA+128 address: endpoint transmitter when bUEP_T_TOG=0; UEPn_DMA+192 address: endpoint transmitter when bUEP_T_TOG=1

USB endpoint n buffer start address (UEPn_DMA)(n=0/1/2/3):

Bit	Name	Access	Description	Reset value
[7:0]	UEPn_DMA_H	RW	Endpoint n buffer start address high byte, only the lower 2 bits are valid, and the higher 6 bits are fixed to be 0.	0xh
[7:0]	UEPn_DMA_L	RW	Endpoint n buffer start address low byte	xxh

Note: the length of the buffer that receives data >= min (maximum data packet length possibly received + 2 bytes, 64 bytes)

16.4 Host register

In USB host mode, CH554 provides 1 set of bidirectional host endpoint, including a transmission endpoint OUT and a reception endpoint IN. The maximum data packet length is 64 bytes, supporting control transfer, bulk transfer, interrupt transfer, and simultaneous/synchronous transfer.

Each USB transaction initiated by host endpoint, and it will automatically set the interrupt flag UIF_TRANSFER after processing. The application program can directly query or query and analyze the interrupt flag register (USB_INT_FG) in the USB interrupt service program, and perform corresponding processing according to each interrupt flag; in addition, if UIF_TRANSFER is valid, it is required to continue to analyze the USB interrupt status register (USB_INT_ST), and perform the corresponding processing according to the response PID identification (MASK_UIS_H_RES) of the current USB transmission transaction.

If the synchronization trigger bit (bUH_R_TOG) of IN transaction of host reception endpoint is set in advance, you can judge whether the synchronization trigger bit of the data packet received matches the synchronization trigger bit of the endpoint through U_TOG_OK or bUIS_TOG_OK; if the data are synchronized, the data are valid; if the data are not synchronized, the data should be discarded. After the USB transmit or receive interrupt is processed each time, the synchronization trigger bit of corresponding host endpoint should be modified correctly to synchronize the data packet sent next time and detect whether the data packet received next time is synchronized; in addition, bUEP_AUTO_TOG can be set to automatically flip the corresponding synchronization trigger bit after successful transmission or reception.

USB host token setting register (UH_EP_PID) is the reuse of the USB endpoint 2 control register in USB device mode, which is used to set the endpoint number of the target device being operated and the token PID packet identification of the USB transmission transaction. The data corresponding to the SETUP token and OUT token is provided by the host transmission endpoint. The data to be sent is in the UH_TX_DMA buffer, and the length of the data to be sent is set in UH_TX_LEN; the data corresponding to the IN token is returned by the target device to the host reception endpoint, the received data is stored in the UH_RX_DMA buffer, and the received data length is stored in USB_RX_LEN.

Table 16.4.1 USB host related registers (those marked in grey are controlled by RB_UC_RESET_SIE reset)

Name	Address	Description	Reset value
UHOST_CTRL	D1h	Physical port control register of USB host	10xx 0000b
UH_SETUP	D2h	USB host auxiliary setting register	0000 0000b
UH_RX_CTRL	D4h	USB host reception endpoint control register	0000 0000b
UH_EP_PID	D5h	USB host token setting register	0000 0000b
UH_TX_CTRL	D6h	USB host transmission endpoint control register	0000 0000b
UH_TX_LEN	D7h	USB host transmission length register	0xxx xxxxb
UH_EP_MOD	EBh	USB host endpoint mode control register	0000 0000b
UH_RX_DMA_H	E5h	USB host receive buffer start address high byte	0000 00xxb
UH_RX_DMA_L	E4h	USB host receive buffer start address low byte	xxxx xxxxb
UH_RX_DMA	E4h	UH_RX_DMA_L and UH_RX_DMA_H constitute a	0xxxh

		16-bit SFR	
UH_TX_DMA_H	E7h	USB host transmit buffer start address high byte	0000 00xxb
UH_TX_DMA_L	E6h	USB host transmit buffer start address low byte	xxxx xxxxb
UH_TX_DMA	E6h	UH_TX_DMA_L and UH_TX_DMA_H constitute a 16-bit SFR	0xxxh

USB host physical port control register (UHOST_CTRL), controlled by bUC_RESET_SIE reset:

Bit	Name	Access	Description	Reset value
7	bUH_PD_DIS	RW	USB host port UDP/UDM pin internal pull-down resistor disable bit 1: Internal pull-down resistor disabled; 0: Internal pull-down resistor enabled. This bit is not controlled by bUSB_IO_EN, and can be used in GPIO mode to provide pull-down resistor.	1
6	Reserved	RO	Reserved	0
5	bUH_DP_PIN	RO	Current UDP pin status 0: Low level; 1: High level.	x
4	bUH_DM_PIN	RO	Current UDM pin status 0: Low level; 1: High level.	x
3	Reserved	RO	Reserved	0
2	bUH_LOW_SPEED	RW	USB host port low speed mode enable bit 1: 1.5Mbps, low speed; 0: 12Mbps, full speed.	0
1	bUH_BUS_RESET	RW	USB host port bus reset control bit 1: Force the host port to output USB bus reset; 0: End the output	0
0	bUH_PORT_EN	RW	USB host port enable bit 0: Host port disabled; 1: Host port enabled. This bit is reset automatically when the USB device is disconnected	0

USB host auxiliary setting register (UH_SETUP):

Bit	Name	Access	Description	Reset value
7	Reserved	RO	Reserved	0
6	bUH_SOF_EN	RW	Automatic generation of SOF packet enable bit 1: USB host automatically generates the SOF packet; 0: SOF packet is not generated automatically, but can be generated manually	0

[5:0]	Reserved	RO	Reserved	00h

USB host reception point control register (UH_RX_CTRL):

Bit	Name	Access	Description	Reset value
7	bUH_R_TOG	RW	Synchronization trigger bit expected by the receiver of USB host (handle IN services) 0: Expected DATA0; 1: Expected DATA1.	0
[6:5]	Reserved	RO	Reserved	00b
4	bUH_R_AUTO_TOG	RW	Auto toggle bUH_R_TOG enable bit 1: Auto toggle bUH_R_TOG flag after successfully received by the USB host; 0: No automatic toggle, but manual switch is allowed.	0
3	Reserved	RO	Reserved	0
2	bUH_R_RES	RW	Response control bit of USB host receiver for IN transaction 0: Respond ACK, or ready; 1: No response, used for real-time/synchronous transmission with non-endpoint0 of the target device	0
[1:0]	Reserved	RO	Reserved	00b

USB host token setting register (UH_EP_PID):

Bit	Name	Access	Description	Reset value
[7:4]	MASK_UH_TOKEN	RW	Set the token PID packet identification of this USB transmission transaction	0000b
[3:0]	MASK_UH_ENDP	RW	Set the endpoint number of the target device being operated this time	0000b

USB host transmission endpoint control register (UH_TX_CTRL):

Bit	Name	Access	Description	Reset value
7	Reserved	RO	Reserved	0
6	bUH_T_TOG	RW	Synchronization trigger bit prepared by the transmitter of USB host (handle SETUP/OUT services) 0: Transmit DATA0; 1: Transmit DATA1.	0
5	Reserved	RO	Reserved	0
4	bUH_T_AUTO_TOG	RW	Auto toggle bUH_T_TOG enable bit 1: Auto toggle bUH_T_TOG flag after successfully transmitted by the USB host; 0: Not auto toggle, but manual switch is allowed	0

[3:1]	Reserved	RO	Reserved	000b
0	bUH_T_RES	RW	Response control bit of USB host transmitter for SETUP/OUT transaction 0: Expect to respond ACK or ready; 1: Expect no response, used for real-time/synchronous transmission with non-endpoint0 of the target device	0

USB host transmission length register (UH_TX_LEN):

Bit	Name	Access	Description	Reset value
[7:0]	UH_TX_LEN	RW	Set the number of data bytes that USB host transmission endpoint is ready to transmit	xxh

USB host endpoint mode control register (UH_EP_MOD):

Bit	Name	Access	Description	Reset value
7	Reserved	RO	Reserved	0
6	bUH_EP_TX_EN	RW	0: USB host transmission endpoint disabled to transmit data; 1: USB host transmission endpoint enabled to transmit data (SETUP/OUT).	0
5	Reserved	RO	Reserved	0
4	bUH_EP_TBUF_MOD	RW	USB host transmission endpoint data buffer mode control bit	0
3	bUH_EP_RX_EN	RO	0: USB host reception endpoint disabled to receive data; 1: USB host reception endpoint enabled to receive data (IN).	0
[2:1]	Reserved	RO	Reserved	00b
0	bUH_EP_RBUF_MOD	RW	USB host reception endpoint data buffer mode control bit	0

The data buffer modes of USB host transmission endpoint are controlled by a combination of bUH_EP_TX_EN and bUH_EP_TBUF_MOD, refer to the following table.

Table 16.4.2 Host transmit buffer mode

bUH_EP_TX_EN	bUH_EP_TBUF_MOD	Structure description: Take UH_TX_DMA as the start address
0	x	Endpoint is disabled, and the UH_TX_DMA buffer is not used
1	0	Single 64-byte transmit buffers (SETUP/OUT)
1	1	Double 64-byte transmit buffers, selected by bUH_T_TOG: When bUH_T_TOG=0, select the first 64 bytes of the buffer;

		When bUH_T_TOG=1, select the last 64 bytes of the buffer

The data buffer modes of USB host reception endpoint are controlled by a combination of bUH_EP_RX_EN and bUH_EP_RBUF_MOD, refer to the following table.

Table 16.4.3 Host receive buffer mode

bUH_EP_RX_EN	bUH_EP_RBUF_MOD	Structure description: Take UH_RX_DMA as the start address
0	x	Endpoint is disabled, and the UH_RX_DMA buffer is not used
1	0	Single 64-byte receive buffers (IN)
1	1	Double 64-byte receive buffers, selected by bUH_R_TOG: When bUH_R_TOG=0 select the first 64 bytes of the buffer; When bUH_R_TOG=1, select the last 64 bytes of the buffer

USB host receive buffer start address (UH_RX_DMA)

Bit	Name	Access	Description	Reset value
[7:0]	UH_RX_DMA_H	RW	USB host receive buffer start address higher byte, only the lower 2 bits are valid, and the higher 6 bits are fixed to be 0	0xh
[7:0]	UH_RX_DMA_L	RW	USB host receive buffer area start address low byte	xxh

USB host receive/transmit buffer start address (UH_TX_DMA):

Bit	Name	Access	Description	Reset value
[7:0]	UH_TX_DMA_H	RW	USB host transmit buffer start address higher byte, only the lower 2 bits are valid, and the higher 6 bits are fixed to be 0	0xh
[7:0]	UH_TX_DMA_L	RW	USB host transmit buffer start address low byte	xxh

17. Touch-Key

17.1 Introduction to Touch-Key

CH554 provides capacitance detection module and related timer. It has 6 input channels and supports capacitance range of 5pF~150pF. Self-capacitance mode can support up to 6 touch keys, while mutual capacitance mode can support up to 15 touch keys.

17.2 Touch-Key register

Table 17.2.1 Touch-Key related registers

Name	Address	Description	Reset value

TKEY_CTRL	C3h	Touch-Key control register	x0h
TKEY_DATH	C5h	Touch-Key data high byte (read only)	00h
TKEY_DATL	C4h	Touch-Key data low byte (read only)	xxh
TKEY_DAT	C4h	TKEY_DATL and KEY_DATH constitute a 16-bit SFR	00xxh

Touch-Key control register (TKEY_CTRL):

Bit	Name	Access	Description	Reset value
7	bTKC_IF	RO	Timing interrupt flag. If bTKD_CHG=0, it is automatically set to 1 and requests for interrupt at the end of the current timing cycle. It is automatically reset at the end of the preparation stage, or reset by writing to TKEY_CTRL. If bTKD_CHG=1, it is automatically reset and does not request for interrupt, skip the current cycle, and then re-prepare and detect in the next cycle, and automatically set to 1 and request for interrupt at the end of the next cycle.	x
[6:5]	Reserved	RO	Reserved	00b
4	bTKC_2MS	RW	Cycle selection of capacitance detection timer 0: 1mS; 1: 2 mS. The first 87uS of each cycle is the preparation stage, and the remaining time is the detection stage. The above time is based on the time when Fosc=24MHz	0
3	Reserved	RO	Reserved	0
2	bTKC_CHAN2	RW	Touch key capacitance detection input selection high bit	0
1	bTKC_CHAN1	RW	Touch key capacitance detection input selection median bit	0
0	bTKC_CHAN0	RW	Touch key capacitance detection input selection low bit	0

The input channel of touch key capacitance detection is selected by bTKC_CHAN2～bTKC_CHAN0.

bTKC_CHAN2	bTKC_CHAN1	bTKC_CHAN0	Select touch key capacitance detection input channel
0	0	0	Turn off the power of capacitance detection module, Only used for independent timing interrupts with cycles of 1mS or 2mS
0	0	1	TIN0 (P1.0)
0	1	0	TIN1 (P1.1)
0	1	1	TIN2 (P1.4)
1	0	0	TIN3 (P1.5)

1	0	1	TIN4 (P1.6)
1	1	0	TIN5 (P1.7)
1	1	1	Turn on the power of capacitance detection module without connecting any channel

Touch-Key data register (TKEY_DAT):

Bit	Name	Access	Description	Reset value
7	bTKD_CHG TKEY_DATH[7]	RO	Touch-Key control change flag 1: TKEY_CTRL is rewritten during capacitance detection, which may result in invalid TKEY_DAT data, and bTKC_IF is not set at the end of the current cycle. The bit is automatically reset at the end of the preparation stage of each timing cycle, and the bit should be disabled to obtain data.	0
6	Reserved	RO	Reserved	0
[5:0]	TKEY_DATH	RO	Touch-Key data high byte. Automatically reset at the end of the preparation stage of each timing cycle. Automatically count in the capacitance detection stage. Keep the data unchanged in the preparation stage to read the timing interrupt program	00h
[7:0]	TKEY_DATL	RO	Touch-Key data low byte. Automatically reset at the end of the preparation stage of each timing cycle. Automatically count in the capacitance detection stage. Keep the data unchanged in the preparation stage to read the timing interrupt program.	xxh

17.3 Touch-Key function

Capacitance detection steps:

(1). Set bTKC_2MS and bTKC_CHAN2 ~ bTKC_CHAN0 in the TKEY_CTRL register, to select the cycle and input channel. For the selected input channel, the GPIO pin where it's located must be set in either high-impedance input mode or open-drain output mode and in output 1 state (equivalent to high-impedance input), Pn_DIR_PU[x]=0.

(2). Reset bTKC_IF and turn on interrupt IE_TKEY to wait for timing interrupt, or enter the interrupt program by actively querying bTKC_IF.

(3). Upon the completion of the capacitance detection of the current channel, bTKC_IF request interrupt will be set automatically, meanwhile enter the preparation stage of the next cycle, and keep the TKEY_DAT data unchanged about 87uS.

(4). Enter the interrupt program, firstly read the capacitance data of the current channel from TKEY_DAT, and shield the highest bit bTKD_CHG. This data is the relative value which is inversely proportional to the capacitance. When the touch key is pressed, the data is smaller than that when the key is not pressed.

(5). Set bTKC_2MS and bTKC_CHAN2 ~ bTKC_CHAN0 in TKEY_CTRL register, and select the next

input channel. This writing operation will automatically reset bTKC_IF, and end the interrupt request.

(6). The TKEY_DAT data read in step (4) is compared with that saved before when there is no pressing of the key to determine whether there is capacitance change and whether any key is pressed.

(7). Interrupt returns, and then turn to step (3) after the capacitance detection of the next channel is completed.

18. Parameters

18.1 Absolute maximum ratings

Stresses at or above the absolute maximum ratings listed in the table below may cause permanent damage to the device.

Symbol	Parameter description	Min.	Max.	Unit
TA	Operating ambient temperature	-40	85	℃
TS	Storage ambient temperature	-55	125	℃
VCC	Supply voltage (VCC is connected to power, GND is connected to ground)	-0.4	5.8	V
VIO	Voltage on input/output pins except P3.6/P3.7	-0.4	VCC+0.4	V
VIOU	Voltage on P3.6/P3.7 input/output pins	-0.4	V33+0.4	V

18.2 Electrical characteristics (5V)

Test conditions: TA=25℃, VCC=5V, Fsys=6MHz

Symbol	Parameter description		Min.	Typ.	Max.	Unit
VCC5	VCC pin supply voltage	V33 is only connected with a capacitor externally	3.7	5	5.5	V
V33	Internal USB power regulator output voltage		3.14	3.27	3.4	V
ICC24M5	Total supply current when Fsys=24MHz		8	11		mA
ICC6M5	Total supply current when Fsys=6MHz		4	6		mA
ICC750K5	Total supply current when Fsys=750KHz		2	3		mA
ISLP5	Total supply current after sleep			0.1	0.2	mA
ISLP5L	VCC=V33=5V, an external crystal clock selected, bLDO3V3_OFF=1, LDO disabled, Total supply current after sleep			0.008	0.02	mA
IADC5	ADC operating current			200	800	uA
ICMP5	Voltage comparator module operating current			100	500	uA
ITKEY5	Touch key capacitance detection module operating current			150	250	uA
VIL5	Input low level voltage		-0.4		1.2	V
VIH5	Input high level voltage		2.4		VCC+0.4	V

VOL5	Output low level voltage (I_{IL}=12mA)			0.4	V
VOH5	Output high level voltage (I_{OH}=8mA)	VCC-0.4			V
VOH5U	Output high level voltage for P3.6/P3.7 (I_{OH}=8mA)	V33-0.4			V
IIN	The input current without pull-up resistor	-5	0	5	uA
IDN5	The input current with pull-down resistor	-35	-70	-140	uA
IUP5	The input current with pull-up resistor	35	70	140	uA
IUP5X	The input current with pull-up resistor from low to high	250	400	600	uA
Vpot	Power on reset threshold	2.1	2.3	2.5	V

18.3 Electrical characteristics (3.3V)

Test conditions: TA=25°C, VCC=V33=3.3V, Fsys=6MHz

Symbol	Parameter description		Min.	Typ.	Max.	Unit
VCC3	VCC pin power voltage	V33 connected to VCC, and turn on USB	3.0	3.3	3.6	V
		V33 connected to VCC, and turn off USB	2.7	3.3	3.6	V
ICC16M3	Total supply current when Fsys=16MHz		4	6		mA
ICC6M3	Total supply current when Fsys=6MHz		2	4		mA
ICC750K3	Total supply current when Fsys=750KHz		1	2		mA
ISLP3	Total supply current after sleep			0.07	0.15	mA
ISLP3L	bLDO3V3_OFF=1, LDO disabled, Total supply current after sleep			0.004	0.01	mA
IADC3	ADC operating current			150	500	uA
ICMP3	Voltage comparator module operating current			70	300	uA
ITKEY3	Touch key capacitance detection module operating current			130	200	uA
VIL3	Input low level voltage		-0.4		0.8	V
VIH3	Input high level voltage		1.9		VCC+0.4	V
VOL3	Output low level voltage (I_{IL}=8mA)				0.4	V
VOH3	Output high level voltage (I_{OH}=5mA)		VCC-0.4			V
VOH3U	Output high level voltage for P3.6/P3.7 (I_{OH}=8mA)		V33-0.4			V
IIN	The input current without pull-up resistor		-5	0	5	uA
IDN3	The input current with pull-down resistor		-15	-30	-60	uA
IUP3	The input current with pull-up resistor		15	30	60	uA

IUP3X	The input current with pull-up resistor from low to high	100	170	250	uA
Vpot	Power on reset threshold	2.1	2.3	2.5	V

18.4 Timing parameters

Test conditions: TA=25°C, VCC=5V or VCC=V33=3.3V, Fsys=6MHz

Symbol	Parameter description	Min.	Typ.	Max.	Unit
Fxt	External crystal frequency or XI input clock frequency	6	24	25	MHz
Fosc	Internal clock frequency after calibration when V33=3V~3.6V	23.64	24	24.36	MHz
Fosc28	Internal clock frequency after calibration when V33=2.8V~3V	23.28	24	24.72	MHz
Fosc27	Internal clock frequency after calibration when V33=2.7V	21	24	25	MHz
Fpll	Frequency after PLL	24	96	100	MHz
Fusb4x	USB sampling clock frequency for the USB host	47.98	48	48.02	MHz
	USB sampling clock frequency for the USB device	47.04	48	48.96	MHz
Fsys	System clock frequency (VCC>=4.4V)	0.1	6	24	MHz
	System clock frequency (4.4V>VCC>=3.3V)	0.1	6	16	MHz
	System clock frequency (VCC<3.3V)	0.1	6	12	MHz
Tpor	Power on reset delay	9	11	15	mS
Trst	External input valid reset signal width	70			nS
Trdl	Thermal reset delay	30	45	60	uS
Twdc	Watchdog overflow/Timer calculation formula	65536 * (0x100 - WDOG_COUNT) / Fsys			
Tusp	Automatically suspend time in USB host mode	2	3	4	mS
	Automatically suspend time in USB host mode	4	5	6	mS
Twak	Time to wake up from sleep mode	1	2	10	uS

19. Package information

19.1 TSSOP20

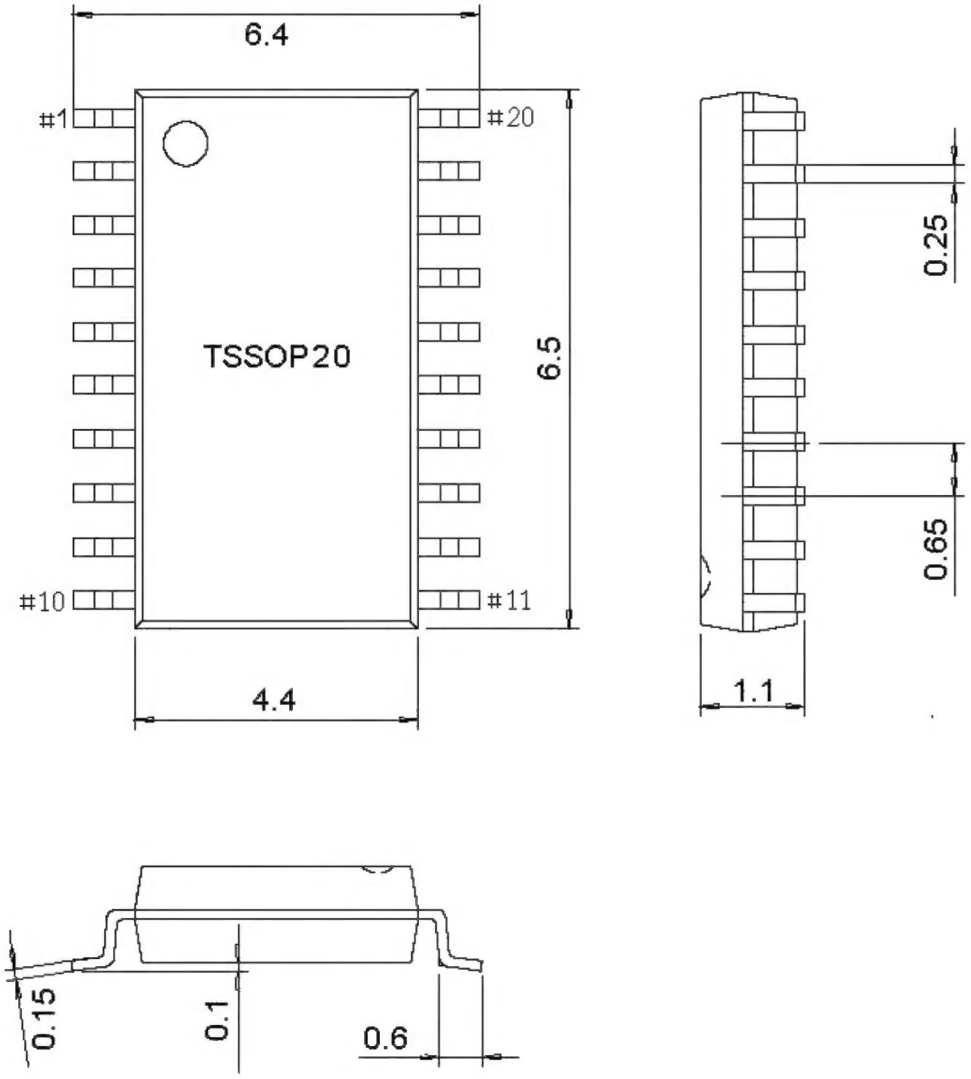

19.2 QFN16-3*3

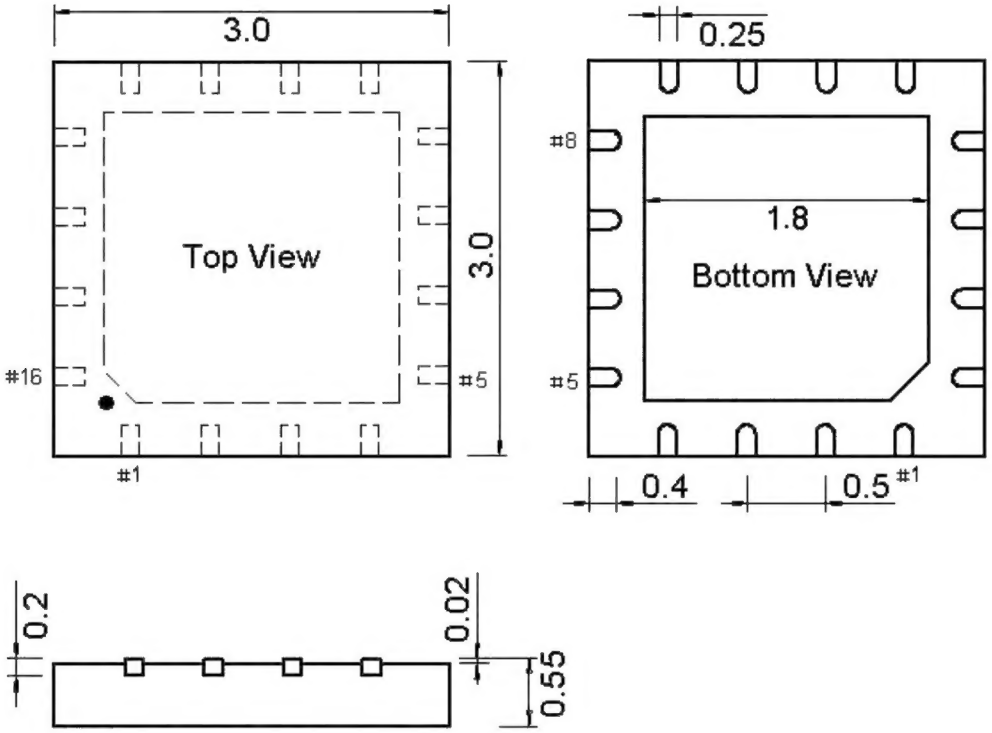

19.3 SOP16-150mil

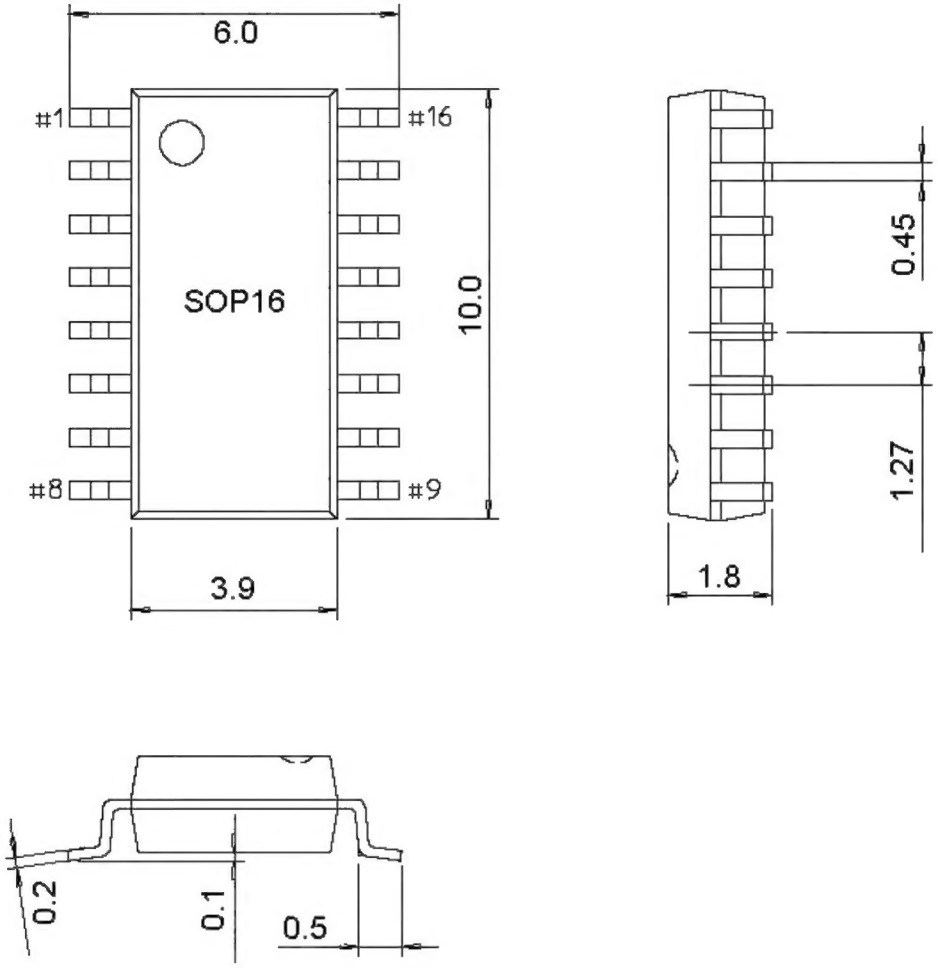

19.4 MSOP10

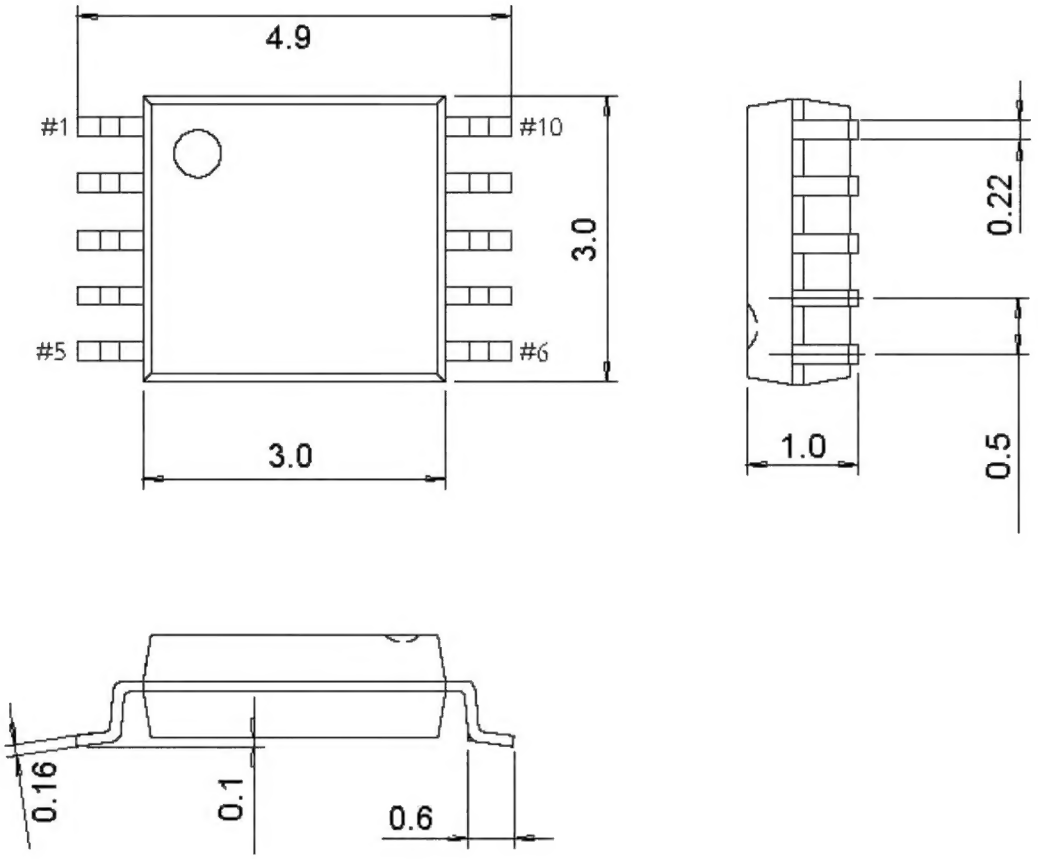

20. Revision history

Revision	Date	Description
V1.0	May 23, 2016	Initial release
V1.1	March 01, 2017	SOP16 package added. CH553 datssheet merged. Chapter 1, Chapter 3, Chapter 4, and Section 5.4 updated.
V1.2	September 15, 2017	Maximum system clock frequency adjusted to 24MHz. Section 8.2 and Section 18.4 updated
V1.3	December 27, 2017	Table of CH554/CH553 differences added in Chapter 1, and some header forms modified.
V1.4	March 23, 2018	Form of the CH554/3 difference table in Chapter 1 modified. Table 18.4 modified. Typos corrected in Section 5.3: Stack Pointer (SP). Suggestions about Data Flash added in Section 6.2.
V1.5	August 22, 2018	Fosc27 in Section 18.4 updated.
V1.6	October 26, 2018	CH553 deleted
V1.7	June 17, 2019	QFN16 package added. Chapter 3 and Chapter 4 updated. Chapter 19 about packages added.
V1.8	January 05, 2022	Note that USB pins are not connected to external resistors in series.

		Expression optimized: Directly write 0 to reset, or write 1 to the corresponding bit in the register to reset.